Building a better future
Global Leader

HYUNDAI INVERTER

HiRUN N 700E

| The Controlling Solution of Powerful Inverter Brand |

HYUNDAI
HEAVY INDUSTRIES CO.,LTD.

Hyundai's Technology for the Best

High performance inverter for efficient business design

the best future with HiRUN N 700E series

HiRUN N700E Series with Powerful Control Solution

| Excellent Applicability to Various Loads |

| Easy Maintenance & Simple Repair |

| High Reliability & Durability |

| Compliance with RoHS |

| Lower Audible Noise |

Clean Power
Hyundai Inverter

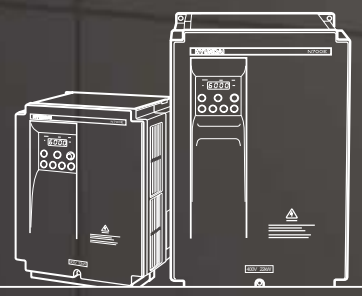

For the highest quality, for the highest customer satisfaction

hi RUN N 700E

HYUNDAI N700E series inverter with high durability, elaborate speed controllability and excellent torque responsibility provides superb operability.

The N700E's compact size and sensorless vector control technology provide perfectly optimized performance for industrial equipment.

Certificates of international standards (CE, UL/cUL) of N700E series make its applications ready for global business.

Model Name Indication

Model Name Indication

N700E | 055 | LF | R

Series name

Applicable motor capacity
004 : 0.4kW
~ ~
055 : 5.5kW
~ ~
3500 : 350kW

Power source
SF: 1-Phase, 220V
LF: 3-Phase, 220V
HF: 3-Phase, 440V

Add Option
R: DC Reactor

Model Configuration

Applicable motor capacity (kW)	1-Phase, 220V	3-Phase, 220V	3-Phase, 440V
0.4	N700E-004SF	N700E-004LF	N700E-004HF
0.7	N700E-007SF	N700E-007LF	N700E-007HF
1.5	N700E-015SF	N700E-015LF	N700E-015HF
2.2	N700E-022SF	N700E-022LF	N700E-022HF
3.7		N700E-037LF	N700E-037HF
5.5		N700E-055LF	N700E-055HF
7.5		N700E-075LF	N700E-075HF
11		N700E-110LF	N700E-110HF
15		N700E-150LF	N700E-150HF
18.5		N700E-185LF	N700E-185HF
22		N700E-220LF	N700E-220HF
30			N700E-300HF
37			N700E-370HF
45			N700E-450HF
55			N700E-550HF
75			N700E-750HF
90			N700E-900HF
110			N700E-1100HF
132			N700E-1320HF
160			N700E-1600HF
220			N700E-2200HF
280			N700E-2800HF
350			N700E-3500HF

Note) DC Reactor option for 30~132kW

Contents

06 Features / 08 Specifications / 10 Dimensions / 13 Operations /14 Function Lists
20 Terminal Functions / 22 Connecting Diagram /23 Connection to PLC
24 Protective Functions / 25 Wiring and Options /34 For Correct Operation

:: Improved Control Performance

High Torque Performance in Ultra Low Speed Zone by Using Sensorless Vector Control

- Hyundai's advanced sensorless vector control technology provides a motor with high torque performance in ultra low speed zone (Sensorless vector control: above 150% at 1Hz).
- In case of fast acceleration/deceleration of motor, N700E series provides powerful torque controllability without trip.
- Sensorless vector control technology expands the range of controlling speed.

Superb Speed Control Performance by Improved Tuning Technology for Motors

- Through technology of compensating the motor time constant while motor tuning minimizes the speed change, stable motor opeation can be achieved.

Intensified Protective Functions for Safety while Running

- Ground fault protection can prevent accidents.
- Countermeasure for output's phase loss protects motor while running.

Built-in Regenerative Braking System

- BRD is basically equipped with the inverter so that the easy operation for acceleration/deceleration time is achieved without additional options.
- Driving performance of acceleration and deceleration maximizes efficiency.

Enhanced Flexibility for Various Loads

- Built in PID function uniformly controls oil pressure and flow quantity without additional options.
- Improved torque characteristic, which is reduced to the 1.7th power, perfectly fits with loads for fans and pumps.
- Optimized energy saving according to the characteristics of loads is achieved.

Various Inverter Display Functions

- The operational status of the inverter are displayed on the monitor so that an user can understand the condition of the inverter.
- Cumulative hours of driving time and the actual running time are displayed for easy maintenance.

Convenient Maintenance and Repair

- N700E is available to replace the fan without separation.
- Fan on/off function increases fan's durability and minimizes fan's noise.

:: Various Load Compatibility

Fan & Pump

Air Conditioning & Dust Collecting Fan

- Energy saving by selecting torque characteristic of a load
- Restart function in case of momentary power interruption
- Factory automation by PLC
- Machine protection by soft start/stop
- Auto operation by precise PID control function
- Low noise operation
- Quick responsiveness to load change by frequency jump and multi speed operation

Cooling Tower

- Stable operation by supplying high qualified energy
- Energy saving by speed and torque control

Water supply pump
Cooling water circulation pump
Boiler water supply pump

Conveyor & Transport Machine

Conveyor

- Multi relay output terminal
- Accurate acceleration & deceleration
- Overweight prevention by using over-torque signal
- Prevention of load slippage by curve acceleration and deceleration

Factory Automation

- Factory automation with PLC
- High speed torque response to prevent slip down
- Soft start and stop

Textile Machine

Spinning Machine

- Soft start/stop for prevention of snap and cut off
- Unit design for tough circumstances (dust, cotton)
- Improvement of product quality by stable operating speed

Washing Machine

Washing Machine

- Powerful torque boost function
- Over torque limit function
- Separate setting of acceleration and deceleration time
- Built-in regenerative braking unit (below 22kW)
- Soft start/stop

220V 1-Phase/3-Phase

Inverter Model (N700E-□□□□□)		004SF	007SF	015SF	022SF	004LF	007LF	015LF	022LF	037LF	055LF/ 075LFP	075LF/ 110LFP	110LF/ 150LFP	150LF/ 185LFP	185LF/ 220LFP	220LF
Max. Available motor(4P, kW)	Heavy Duty	0.4	0.75	1.5	2.2	0.4	0.75	1.5	2.2	3.7	5.5	7.5	11.0	15.0	18.5	22.0
	Normal Duty	-	-	-	-	-	-	-	-	-	7.5	11.0	15.0	18.5	22.0	-
Rated Capacity(kVA)	Heavy Duty	1.2	2.1	2.9	4.6	1.2	2.1	2.9	4.6	7.1	10.0	13.3	18.7	26.6	31.6	37.4
	Normal Duty	-	-	-	-	-	-	-	-	-	12.5	18.2	24.1	30.3	35.3	-
Rated Input AC Voltage		1-Phase 200~240V±10%, 50/60Hz±5%				3-Phase 200~240V±10%, 50/60Hz±5%										
Rated Output Voltage		3-Phase 200~240V(Depend on receiving voltage)				3-Phase 200~240V(Depend on receiving voltage)										
Rated Output Current(A)	Heavy Duty	3	5	7	11	3	5	7	11	17	24	32	45	64	76	90
	Normal Duty	-	-	-	-	-	-	-	-	-	30	44	50	73	85	-
Brake	Recover Brake	Built in Brake Circuit(Need to Additional Brake Resistor)				Built in Brake Circuit(Need to additional brake resistor)										
	Resistance(Ω)	50	50	50	50	50	50	50	50	35	17	17	17	8.7	6	6
Weight(kg)		1.2	1.2	1.5	1.5	1.2	1.2	1.2	1.5	2.0	4.2	4.5	4.5	6.5	7.5	8.0
Enclosure		IP20														

440V 3-Phase

Inverter model (N700E-□□□□□)		004HF	007HF	015HF	022HF	037HF	055HF/ 075HFP	075HF/ 110HFP	110HF/ 150HFP	150HF/ 185HFP	185HF/ 220HFP	220HF/ 300HFP
Max. Available motor(4P, kW)	Heavy Duty	0.4	0.75	1.5	2.2	3.7	5.5	7.5	11.0	15.0	18.5	22.0
	Normal Duty	-	-	-	-	-	7.5	11.0	15.0	18.5	22.0	30.0
Rated Capacity(kVA)	Heavy Duty	1.5	2.8	4	6	7.6	10.0	13.3	19.1	26.6	31.6	37.4
	Normal Duty	-	-	-	-	-	12.5	18.2	24.1	30.7	35.7	47.3
Rated Input AC Voltage		3-Phase 380~480V±10%, 50/60Hz±5%										
Rated Output Voltage		3-Phase 380~480V(Depend on receiving voltage)										
Rated Output Current(A)	Heavy Duty	1.8	3.4	4.8	7.2	9.2	12	16	23	32	38	45
	Normal Duty	-	-	-	-	-	15	22	29	37	43	57
Brake	Recover Brake	Built in Brake Circuit(Need to additional brake resistor)										
	Resistance(Ω)	180	180	180	100	100	70	50	50	30	20	20
Weight(kg)		1.5	1.5	1.5	1.5	2.0	4.2	4.5	4.5	7.0	7.0	7.5
Enclosure		IP20										

440V 3-Phase

Inverter model (N700E-□□□□□)		300HF/ 370HFP	370HF/ 450HFP	450HF/ 550HFP	550HF/ 750HFP	750HF/ 900HFP	900HF/ 1100HFP	1100HF/ 1320HFP	1320HF/ 1600HFP	1600HF/ 2000HFP	2200HF/ 2500HFP	2800HF/ 3200HFP	3500HF/ 3800HFP
Max. Available motor(4P, kW)	Heavy Duty	30	37	45	55	75	90	110	132	160	220	280	350
	Normal Duty	37	45	55	75	90	110	132	160	200	250	320	375
Rated Capacity(kVA)	Heavy Duty	48.2	62.4	74.8	91.5	123.9	146.3	180.4	216.2	230	315	400	500
	Normal Duty	58.1	70.1	87.2	112	133	162	191	245	285	360	470	550
Rated Input AC Voltage		3-Phase 380~480V±10%, 50/60Hz±5%											
Rated Output Voltage		3-Phase 380~480V(Depend on receiving voltage)											
Rated Output Current(A)	Heavy Duty	58	75	90	110	149	176	217	260	300	415	525	656
	Normal Duty	70	85	105	135	160	195	230	285	370	450	600	680
Brake	Recover Brake	Need to Setup Recover Brake Unit											
	Resistance(Ω)	Refer to Option Table (Page 32)											
Weight(kg)		22	22	27	30	50	50	60	60	110	110	170	170
Enclosure		IP00											

Standard 200V, 400V Class

Specification			Description
Control Method 1)			Space vector PWM method
Output Frequency Range 2)			0.01~400Hz
Frequency Accuracy 3)			Digital: Max frequency ±0.01% Analogue: Max frequency ±0.1%
Frequency Resolution			Digital setting: 0.01 Hz (<100Hz), 0.1Hz (>100Hz) Analogue: Max frequency / 500 (when DC 5V input), Max frequency / 1,000 (DC 0~10V, 4~20mA)
V/f Characteristic			Base frequency: 0~400Hz free set Torque pattern selection available (constant torque / reduced torque)
Overload Capacity			150%, 1minute(Heavy Duty), 120%, 1minute(Normal Duty)
Acceleration/Deceleration Time			0.1~3,000sec (linear/curve selection available) 2nd Acceleration/Deceleration setting available
DC Braking			Performs between min frequency and established braking frequency. Level and time setting available
Input	Frequency Setting	Standard Operator	Set by volume up/down key. 1W, 1~5kΩ variable resistor. DC 0~10V (input impedance 10kΩ), 4~20mA (input impedance 200Ω).
		External Signal	
	Forward Reverse Start/Stop	Standard Operator	Run key / Stop key (change forward/reverse by function command).
		External Signal	Forward run/stop, reverse run/stop set by terminal assignment (1a, 1b selection available)
	Intelligent Input Terminal		FW (Forward), RV (Reverse), CF1~4 (Multi-speed), RS (Reset), AT (Analog input current / voltage Transfer), USP (Unattended Start Protection), EXT (External Trip), FRS (Free Run Stop), JG (Jogging Command), SFT (Software Lock Command), 2CH (2nd Acceleration/Deceleration), STA (Start), STP (Stop), F/R (Forward/Reverse), Remote Control UP/DOWM
Output	Intelligent Output Terminal		RUN (Run Signal), FA1 [Frequency Arrival Signal (at the set frequency)], FA2 [Frequency Arrival Signal (at or above the set frequency)], OL (Overload Advanced Notice Signal), OD (Output Deviation of PID Signal), AL (Alarm Signal)
	Frequency Monitor		Analog meter (DC0~10V full scale. Max. 1mA) Analog output frequency signal and analog output current signal Analog output voltage signal selection available.
	Alarm Output Contact		OFF when inverter alarm (b contact output) / Auto switch ON and OFF / Intelligent output terminal use available
Main Functions			Auto-tuning, AVR Function, V/F Setting, Curve Accel./Decel. Selection, Frequency Upper/Lower Limit, 16 Level Multi-speed, Start Frequency Set, Carrier Frequency Setting (0.5~15kHz), PID Control, Frequency Jump, Analog Gain Bias Control, Jogging Run, Electronic Thermal Level Control, Retry, Auto Torque Boost, Trip History Monitor, Software Lock, S-shape Accel./Decel., Frequency Conversion Display, USP, Flying Start
Protective Functions			Over-current Protection, Overload (electronic thermal), Over-voltage, Communication Error, Under-voltage, Output Short, USP Error, EEPROM Error, External Trip, Ground Fault, Temperature Trip, Inverter Overload Protection, Input Phase loss Protection
Environmental Conditions	Ambient Temperature		-10~50°C (over 40°C: set carrier frequency below 2.0kHz)
	Storage Temperature		-20~60°C (while transporting: short time)
	Ambient Humidity		Below 90%RH (non-condensing)
	Vibration		5.9m/s² (0.6G). 10~55Hz (JIS C0911 test methodology)
	Location		Less than 1,000m above sea level, Indoor (no corrosive gas, no flammable gas, no oil-drop, no-dust)
Options			Noise filter, DC reactor, AC reactor, Remote operator, Remote operator cable, Regenerative braking resistor

※ 1) Before control method setting A31 is set to 2 (sensorless vector control), the following instructions should be considered.
- Carrier frequency setting b11 should be above 2.1kHz.
- When you use motors below half capacity of max applicable motor capacity, it is hard to get sufficient quality.
- When over 2 motors are about to be operated, sensorless vector control cannot be applied.

2) When you operate motor over 50/60Hz, inquire about maximum available rotational number.

3) For the purpose of stable motor control, output frequency can exceed approximately 1.5kHz at [A04]

N700E-004SF/007SF, N700E-004LF/007LF/015LF

[Unit : mm]

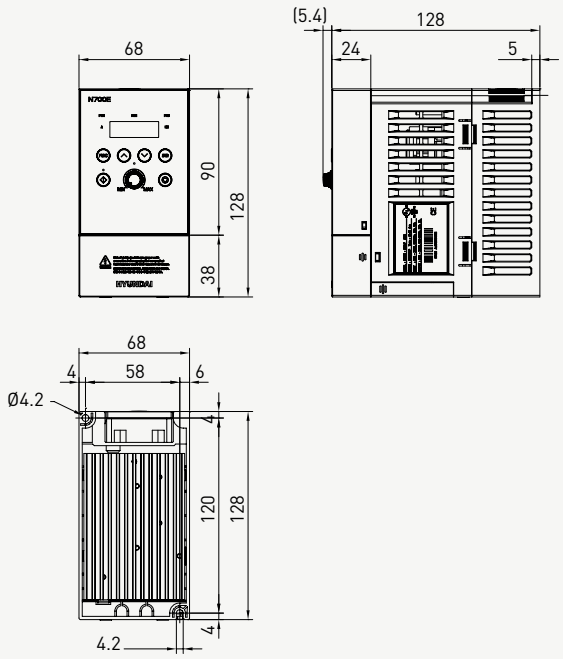

N700E-015SF/022SF, N700E-022LF, N700E-004HF/007HF/015HF/022HF

[Unit : mm]

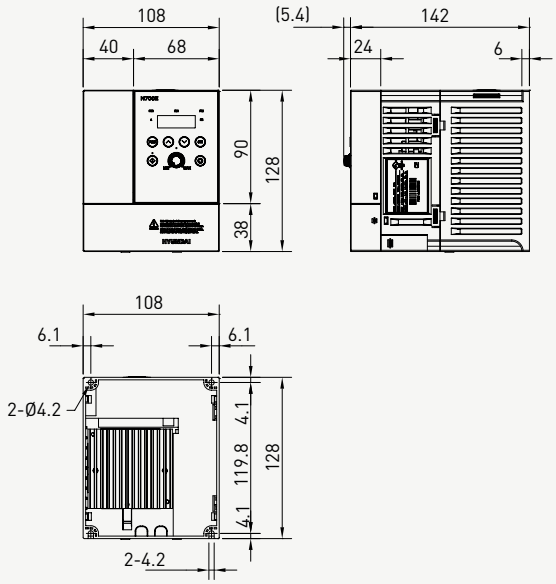

N700E-037LF/HF

[Unit : mm]

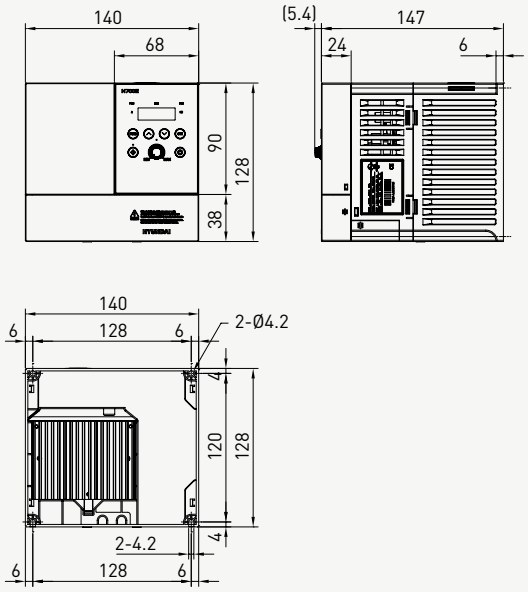

N700E-055LF/055HF, N700E-075LF/075HF, N700E-110LF/110HF

[Unit : mm]

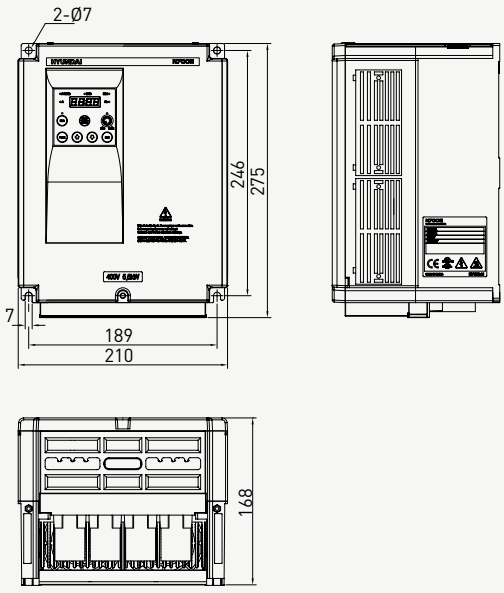

N700E-150LF/150HF, N700E-185LF/185HF, N700E-220LF/220HF

[Unit : mm]

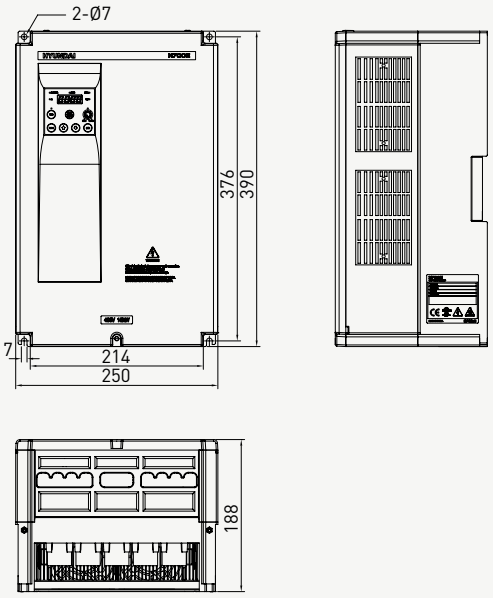

N700E-300HF, N700E-370HF

[Unit : mm]

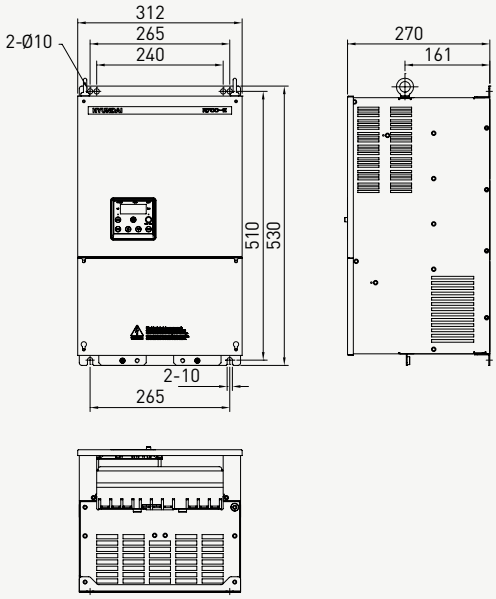

N700E-450HF, N700E-550HF

[Unit : mm]

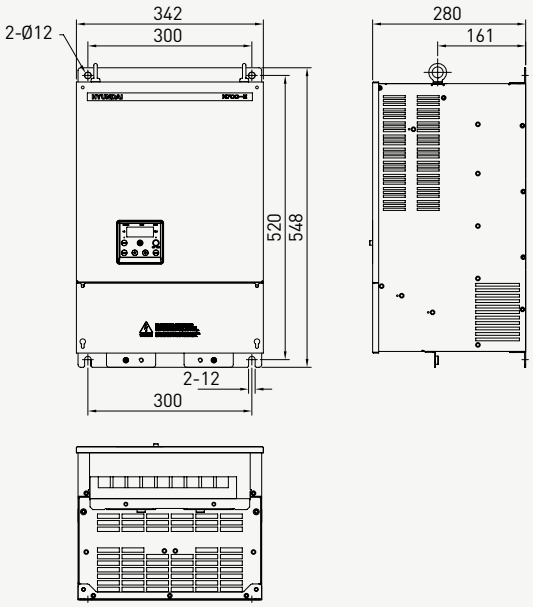

N700E-750HF, N700E-900HF

[Unit : mm]

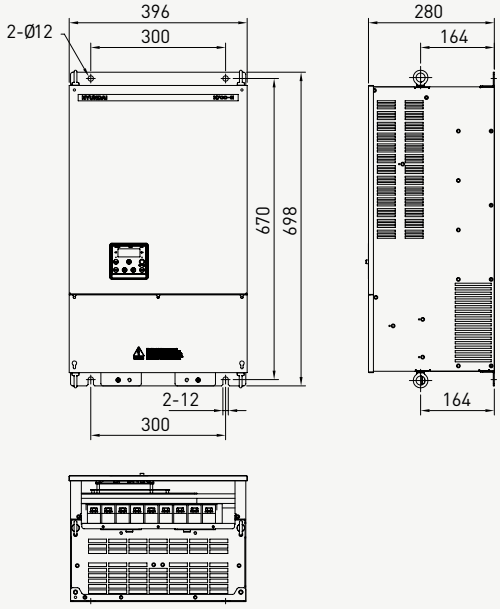

N700E-1100HF, N700E-1320HF

[Unit : mm]

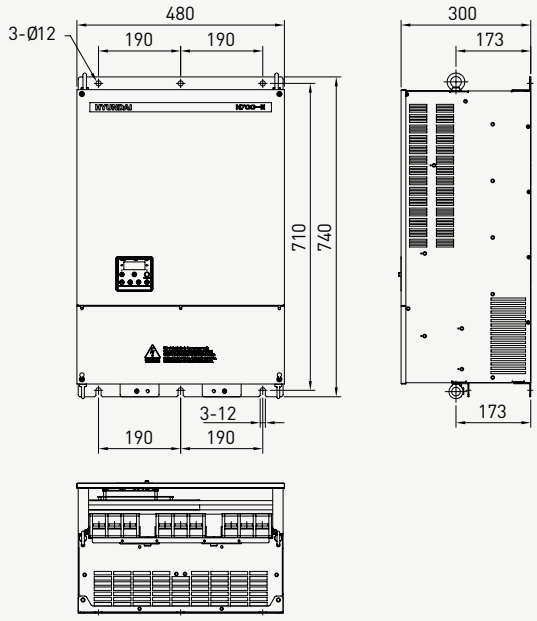

N700E-1600HF, N700E-2200HF

[Unit : mm]

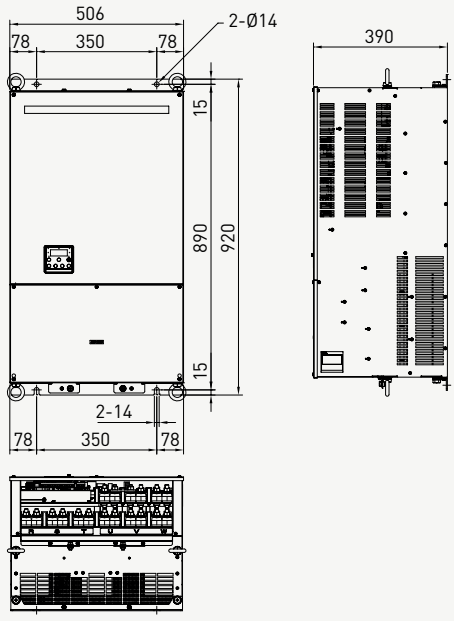

N700E-2800HF, N700E-3500HF

[Unit : mm]

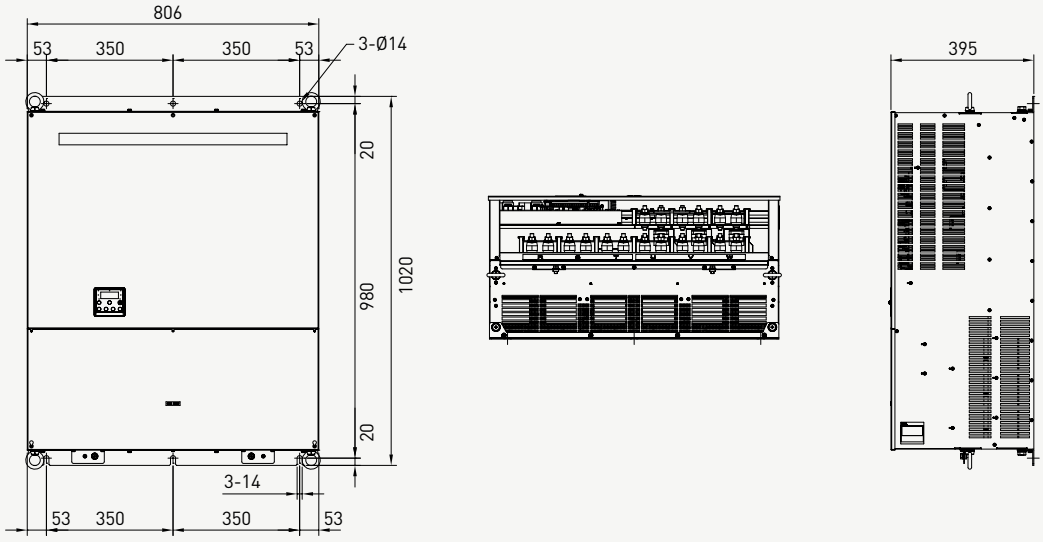

Operations

Run lamp
Light is on when the inverter is generating PWM output or RUN command is entered.

Power lamp
Lamp for the controlling power

Display (LED signal)
Displays frequency, motor current, motor rotational number, alarm setting

Run key
Run the inverter. RUN key is disabled when the inverter is selected to run by terminal. RUN key is available only while the above LED is on.

Function key
Command selecting function.

Up/Down key
Increase/decrease frequency value, and modify set values

PRG lamp
Light is on when the value is entering

Hz/A lamp
Show whether the displayed data is frequency value or data current value.

Stop/Reset key
Stop operating inverter and cancellation of alarm(available in both sides of operator and terminal) When the inverter is run through b15 terminal, operator can select valid or invalid state.

Volume key
Set output frequency.
(available only when the lamp is on)

Store key
Store the selected data or the set value.

Standard Operator Setting

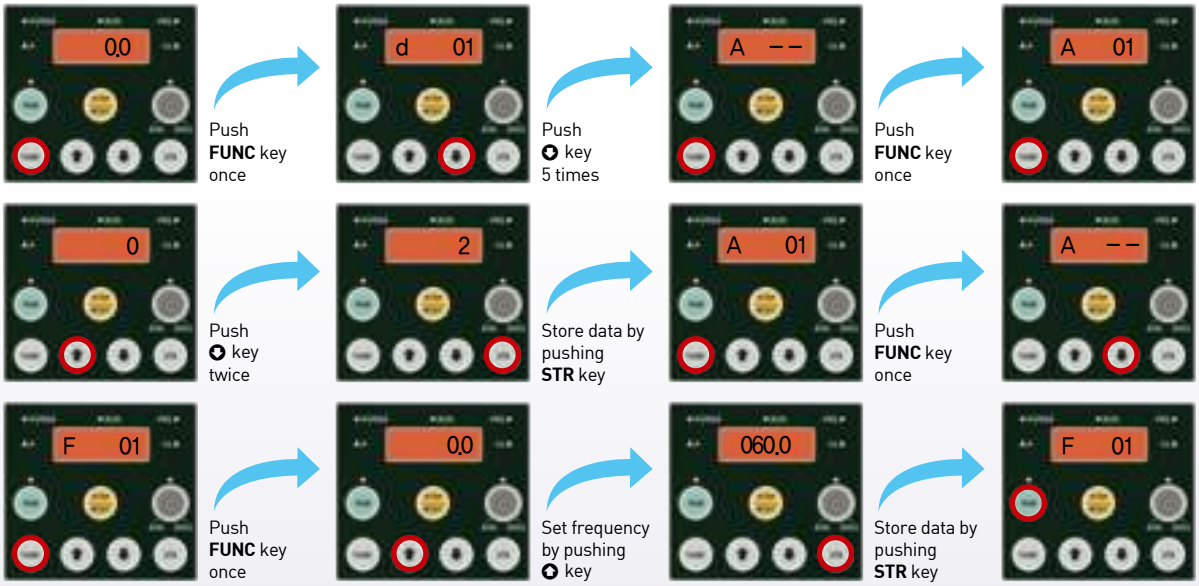

Display Running Frequency

Monitor Modes (d-group) & Basic Setting Modes (F-group)

Main Function	Code	Function Name	Description	Initial Data	Change Mode on Run
Basic Monitor	d01	Output Frequency Monitor	0.00~400.0Hz ("Hz"LED on)		
	d02	Output Current Monitor	0.0~99.9A ("A"LED on)		
	d03	Output Voltage Monitor	Output voltage display (V)		
	d04	Motor Rotational Direction Monitor	"F": Forward direction, "r" : Reverse direction, "O": Stop		
	d05	PID Feedback Monitor	Display converted value (set to "A 50") Availabe when PID function is selected		
	d06	Terminal Input Monitor	Display the state of Intelligent input terminal display		
	d07	Terminal Output Monitor	Display the state of intelligent input terminal and alarm output terminals		
	d08	Frequency Conversion Monitor	0~99.99/100.0~400.0 (= d01 x b14)		
	d09	Power Consumption Monitor	0~9999 [W]		
	d10	Cumulative Time Monitor During RUN (Hr)	0~9999 [Hr]		
	d11	Cumulative Time Monitor During RUN (Min)	0~59 [Min]		
	d12	DC Link Voltage Monitor	0~999 [V]		
	d13	Trip Monitor	Displays the details of the last trip		
	d14	Trip Monitor 1	Display the details for the last 1 protective trip		
	d15	Trip Monitor 2	Display the details for the last 2 protective trips		
	d16	Trip Monitor 3	Display the details for the last 3 protective trips		
	d17	Trip Counter	Display the number of inverter trips		
Basic Setting	F01	Output Frequency Setting	0.00~400.0 [Hz]	Initial volume value	○
	F02	Accelerating Time Setting 1	0.0~999.9 / 1000~3000 [sec]	30.0sec	○
	F03	Decelerating Time Setting 1	0.0~999.9 / 1000~3000 [sec]	30.0sec	○
	F04	Driving Direction Selection	0--- forward / 1--- reverse	0	X

Expanded Function A Mode

Main Function	Code	Function Name	Description	Initial Data	Change Mode on Run
Basic Setting	A01	Frequency Setting Method (Multi-speed Setting)	0 (main volume) / 1 (control circuit terminal input) / 2 (standard operator) / 3 (remote operator)	0 (1) 1)	X
	A02	Run Setting Method	0 (standard operator) / 1 (control circuit terminal input) / 2 (remote operator)	0 (1) 1)	X
	A03	Base Frequency Setting	Set base frequency from 0 to max by 0.01Hz unit	60.00Hz	X
	A04	Maximum Frequency	Maximum frequency can be set from base frequency A03~400Hz by 0.1Hz unit.	60.00Hz	X
Analog Input Setting (External Frequency Setting)	A05	External Frequency Start Value	0~400Hz (0.01Hz unit)	0.00Hz	X
	A06	External Frequency End Value	0~400Hz (0.01Hz unit)	0.00Hz	X
	A07	External Frequency Start Value Ratio	0~100 (0.1% unit)	0.0%	X
	A08	External Frequency End Ratio	0~100 (0.1% unit)	100.0%	X
	A09	External Frequency Start Selection	0 (start from start frequency) 1 (start from 0Hz)	0	X
	A10	External Frequency Sampling	Set sampling number on analog input filter from 1 to 8.	4	X
Multilevel and Jogging Setting	A11 ~ A25	Multi-speed Frequency	0.0~400Hz (0.01Hz unit)	-	○
	A26	Jogging Frequency	0.5~10.0Hz (0.01Hz unit)	0.50Hz	○
	A27	Selection of Jogging Stop Operation	0 (free-run stop) / 1 (stop by decelerating) / 2 (stop by DC braking)	0	X
V/F Characteristic	A28	Torque Boost Selection	0 (manual) / 1 (automatic)	0	X
	A29	Manual Torque Boost	Set voltage of manual torque boost.	2.5% 2)	○
	A30	Manual Torque Boost Frequency	Select frequency ratio out of base frequency from 0~100%.	100.0%	○
	A31	Control Method	0 (linear torque characteristic) / 1 (reduced torque characteristic) / 2 (sensorless vector control)	3 Phase : 0 1 Phase : 2	X
	A32	Output Voltage Gain	20~110%	100.0%	○
DC Braking Setting	A33	DC Braking Selection	0 (disabled) / 1 (enabled)	0	X
	A34	DC Braking Frequency	0.5~10.0Hz (0.01Hz unit)	0.50Hz	X
	A35	DC Braking Waiting Time	0.0~5.0sec (0.1sec unit)	0.0sec	X
	A36	DC Braking Force	0~100% (0.1% unit)	22kW ↓ : 50% 30kW ↑ : 10%	X
	A37	DC Braking Time	0.0~10.0sec (0.1 sec)	0.0sec	X
Frequency Related Setting	A38	Upper Limit of Frequency	A39~A04Hz (0.01Hz unit)	0.00Hz	X
	A39	Lower Limit of Frequency	0.00~A38Hz (0.01Hz unit)	0.00Hz	X
	A40 A42 A44	Frequency Jump	0.00~400Hz (0.01Hz unit)	0.00Hz	X
	A41 A43 A45	Frequency Jump Width	0.00~10.00Hz (0.01Hz unit)	0.00Hz	X

※ 1) In case of under 3.7kW, initial data is 1.
2) In case of over 5.5kW, refer to user's manuals.

Main Function	Code	Function Name	Description	Initial Data	Change Mode on Run
PID Control Setting	A46	PID Selection	0 (disabled) / 1 (enabled)	0	X
	A47	P (Proportion) Gain	0.1~100.0% (0.1 unit)	10.0%	○
	A48	I (Integration) Gain	0.0~100.0sec (0.1 unit)	10.0sec	○
	A49	D (Differentiation) Gain	0.0~100.0sec (0.1 unit)	0.0sec	○
	A50	PID Scale Ratio	0.1~1,000.0 (0.1 unit)	100.0	X
	A51	Feed-Back Input Method	0 (current input) / 1 (voltage input)	0	X
AVR Related Setting	A52	AVR Selection	0 (always ON) / 1 (always OFF) / 2 (OFF only when deceleration)	2	X
	A53	Motor Voltage Capacity	200 / 220 / 230 / 240 (200V class) 380 / 400 / 415 / 440 / 460 / 480 (400V class)	220V / 380V / 440V	X
2nd Accel /Decel Related Functions	A54	2nd Acceleration Time	0.1~999.9/1,000~3,000sec	22kW ↓ : 30.0sec 30kW ↑ : 10.0sec	○
	A55	2nd Deceleration Time	0.1~999.9/1,000~3,000sec	22kW ↓ : 30.0sec 30kW ↑ : 10.0sec	○
	A56	2 Level Accel./Decel. Switching Method Setting	0 (input from terminal [2CH]) / 1 (switching frequency setting from acc / dec1 to acc / dec2)	0	X
	A57	Frequency Setting for Accel./Decel. Time Switching in Acceleration	0.00-400.0Hz (0.01Hz unit)	0.00Hz	X
	A58	Frequency Setting for Accel./Decel. Time Switching in Deceleration	0.00-400.0Hz (0.01Hz unit)	0.00Hz	X
	A59	Acceleration Pattern Selection	0 (linear) / 1 (S-curve) / 2 (U-curve)	0	X
	A60	Deceleration Pattern Selection	0 (linear) / 1 (S-curve) / 2 (U-curve)	0	X
	A61	Voltage Input (O) Offset Setting	Set voltage offset when external analog signal input is entered..	0.0	○
	A62	Voltage Input (O) Gain Setting	Set voltage gain when external analog signal input is entered.	100.0	○
	A63	Current Input (OI) Offset Setting	Set current offset gain when external analog signal input is entered.	0.0	○
	A64	Current Input (OI) Gain Setting	Set current gain when external analog signal input is entered.	100.0	○
	A65	FAN Setting	0 (always ON) / 1 (ON only when RUN)	0	X

Expanded Function b Mode

Main Function	Code	Function Name	Description	Initial Data	Change Mode on Run
Restart Related Functions	b01	Instant Restart Selection	0 (alarm after trip) / 1 (start from 0Hz when restart) / 2 (start from predefined frequency when restart) / 3 (stop by decelerating from predefined frequency when restart)	0	X
	b02	Allowable Restart Time	0.3~1.0sec (0.1sec unit)	1.0sec	X
	b03	Instant Restart Waiting Time	0.3~3.0sec (0.1sec unit)	1.0sec	X
Electric Thermal Related Functions	b04	Electronic Thermal Level	Set electronic thermal level in 20~120% of inverter rated current.	100.0%	X
	b05	Electronic Thermal Characteristic Selection	0 [SUB(reduced torque)] / 1 [CRT(linear torque)]	1	X
Overload Limiting Related Functions	b06	Overload and Over-voltage Limiting Mode	1. Overload, over-voltage restriction mode OFF 2. Overload limiting mode ON 3. Over-voltage limiting mode ON 4. Overload, over-voltage limiting mode ON	3	X
	b07	Overload Limiting Level Setting	Set overload limiting level in 20~200% of rated current.	180% 1)	X
	b08	Overload Limiting Constant Setting	0.1~10.0sec (0.1 unit)	1.0sec	X
Other Functions	b09	Soft-lock Selection	Soft-lock makes operator be unable to change data.	0	X
	b10	Start Frequnecy Adjustment	0.5~10.0Hz (0.01Hz unit)	0.50Hz	X
	b11	Carrier Frequency	0.5~15.0kHz (0.1kHz unit)	5.0kHz 1)	○
	b12	Initialization Mode	0 (initialization of trip data) / 1 (data initialization)	0	X
	b13	Select Initial Value	0 (for Korea) / 1 (for Europe) / 2 (for USA)	0	X
	b14	Frequency Conversion Coefficient	0.01~99.99 (0.01 unit)	1.00	○
	b15	Stop Key Enable	0 (stop enable) / 1 (stop disable)	0	X
	b16	Stop Free-run Operation	0 (restart from 0Hz) / 1 (restart from predefined frequency) / 2 (stop after free-run)	0	X
	b17	Communication	Set inverter communication code from 1~32 when connect inverter with external control equipment	1	X
	b18	Ground Fault Detection	0 : No detection 0.1~100.0%: Detect ground fault according to the predefined ratio out of the rated inverter current.	0.0	X
	b19	Speed Search Current Suppression Level	90~180%	100%	○
	b20	Voltage Increase Level During Speed Search	10~300%	100%	○
	b21	Voltage Decrease Level During Speed Search	10~300%	100%	○
	b22	Speed Decrease Level During Speed Search	1~200% (operator display : 10~2000)	100% (1000)	○
	b23	Frequency Match Operation Selection	0 : 0Hz Starting operation 1 : Frequency matching & Start operation	0	○
	b24	Failure Status Output Selection by Relay in Case of LV Failure	0 : Inactive incase of low voltage failure 1 : Active incase of low voltage failure	0	○
	b25	Stop Method Selection	0 : A normal decelerating stop 1 : Free-run stop	0	○
	b26	P Type Selection	0 : Heavy Duty 1 : Normal Duty (※ Accept for 5.5kW ↑)	0	X
	b27	Input Phase Loss Protection	0 : Input Phase Loss Protection Disable 1 : Time Setting : 0~100(sec)	10	○

※ 1) In case of over 5.5kW, refer to user's manual.

Expanded Function C Mode

Main Function	Code	Function Name	Description	Initial Data	Change Mode on Run
Input Terminal Setting	C01	Intelligent Input Terminal 1 Setting	0 : FW (forward direction) 1 : RV (reverse direction) 2 : CF1 (multi-speed 1) 3 : CF2 (multi-speed 2) 4 : CF3 (multi-speed 3) 5 : CF4 (multi-speed 4) 6 : JG (jogging run) 8 : 2CH (2-level accel/ decel command) 9 : FRS (free-run stop) 10 : EXT (external trip) 11 : USP (unattended start protection) 12 : SFT (soft lock) 13 : AT (analog input voltage / current transferring) 14 : RS (reset) 15 : STA (start) 16 : STP (stop) 17 : F/R (forward/reverse) 18 : Remote Control UP 19 : Remote Control DOWN	0	X
	C02	Intelligent Input Terminal 2 Setting	(Code) - Same as C01	1	X
	C03	Intelligent Input Terminal 3 Setting	(Code) - Same as C01	2	X
	C04	Intelligent Input Terminal 4 Setting	(Code) - Same as C01	3	X
	C05	Intelligent Input Terminal 5 Setting	(Code) - Same as C01	13	X
	C06	Intelligent Input Terminal 6 Setting	(Code) - Same as C01	14	X
Intput Terminal Status Setting	C07	Contact Setting of a/b of Input Terminal 1 (NO/NC)	Set contacts of a/b of intelligent input terminal 1 0-a contacts (normal open) [NO] 1-b contacts (normal close) [NC]	0	X
	C08	Contact Setting of a/b of Input Terminal 2 (NO/NC)	Set contacts of a/b of intelligent input terminal 2	0	X
	C09	Contact Setting of a/b of Input Terminal 3 (NO/NC)	Set contacts of a/b of intelligent input terminal 3	0	X
	C10	Contact Setting of a/b of Input Terminal 4 (NO/NC)	Set contacts of a/b of intelligent input terminal 4	0	X
	C11	Contact Setting of a/b of Input Terminal 5 (NO/NC)	Set contacts of a/b of intelligent input terminal 5	0	X
	C12	Contact Setting of a/b of Input Terminal 6 (NO/NC)	Set contacts of a/b of intelligent input terminal 6	0	X
Output Terminal Setting	C13	Intelligent Relay Output Terminal RN Setting	(Code) RUN (running signal) FA1 [frequency arrival signal (at the set frequency)] FA2 [frequency arrival signal (at or above the set frequency)] OL (overload advanced notice signal) OD (output deviation of PID signal) AL (alarm signal)	0 [1]	X
	C14	a/b Contacts of Intelligent Relay Output Terminal RN Setting	A contacts (normal open) [NO] B contacts (normal close) [NC]	0	X
	C15	Monitor Signal Selection	Sets the intelligent analog output terminal [FM] (Code) Monitors output frequency Monitors output current Monitors output voltage	0	X
Output Terminal Status Setting	C16	Adjustment of Analog Meter GAIN	0~250% (1% unit)	100.0%	0
	C17	Adjustment of Analog Meter OFFSET	-3.0-10.0% (0.1 unit)	0.0%	0
Output Terminal Related Setting	C18	Overload Pre-warning Level Setting	Sets the pre-warning level for overload in 50~200% of rated inverter current	100.0%	X
	C19	Arrival Frequency Setting (Acceleration)	0.00~400.0Hz (0.01Hz unit)	0.00Hz	X
	C20	Arrival Frequency Setting (Deceleration)	0.00~400.0Hz (0.01Hz unit)	0.00Hz	X
	C21	PID Deviation Level Setting	0.0~10.0% (0.1% unit)	10.0%	X

※ 1) In case of under 3.7kW, initial data is 5.

Motor Constant Setting H Mode

Main Function	Code	Function Name	Description		Initial Data	Change Mode on Run
Motor Constant Setting	H01	Auto-tuning Mode	0 : Auto-tuning OFF 1 : Auto-tuning ON (non-ratational mode)		0	X
	H02	Selection Motor Constant	0 : Standard mode data 1 : Auto-tuning data		0	X
	H03	Motor Capacity	055~1320 (LF/HF)	004~037 (SF/LF/HF)	-	X
			2.2L : 220V / 2.2kW 3.7L : 220V / 3.7kW 5.5L : 220V / 5.5kW 7.5L : 220V / 7.5kW 11L : 220V / 11kW 15L : 220V / 15kW 18.5L : 220V / 18.5kW 22L : 220V / 22kW 30L : 220V / 30kW 2.2H : 380V / 2.2kW 3.7H : 380V / 3.7kW 5.5H : 380V / 5.5kW 7.5H : 380V / 7.5kW 11H : 380V / 11kW 15H : 380V / 15kW 18.5H : 380V / 18.5kW 22H : 380V / 22kW 30H : 380V / 30kW 37H : 380V / 37kW 45H : 380V / 45kW 55H : 380V / 55kW 75H : 380V / 75kW 90H : 380V / 90kW 110H : 380V / 110kW 132H : 380V / 132kW 160H : 380V / 160kW 220H : 380V / 220kW 280H : 380V / 280kW 350H : 380V / 350kW	0 : 220V / 0.4kW 1 : 220V / 0.75kW 2 : 220V / 1.5kW 3 : 220V / 2.2kW 4 : 220V / 3.7kW 5 : 380V / 0.4kW 6 : 380V / 0.75kW 7 : 380V / 1.5kW 8 : 380V / 2.2kW 9 : 380V / 3.7kW		
	H04	Motor Pole Selection	2 / 4 / 6 / 8 poles (P)		4	X
	H05	Motor Rated Current	0.1 - 200.0A		-	X
	H06	Motor No-load Current Io	0.1 - 100.0A		-	X
	H07	Motor Rated Slip	0.01 - 10.0%		-	X
	H08	1st Resistor R1 for Motor Constant	Setting range : 0.001 - 30.00Ω		-	X
	H09	Overloaded Inductance Lsig for Motor Constant	Setting range : 0.01 - 100.00mH		-	X
	H10	R1 Auto-tuning Data for Motor Constant	Setting range : 0.001 - 30.00Ω		-	X
	H11	Lsig Auto-tuning Data for Motor Constant	Setting range : 0.01 - 100.00mH		-	X

Main Circuit Terminal Arrangement

Main Circuit Terminal Block	Corresponding Type	Screw Size	Width(mm)
	N700E - 004SF N700E - 007SF	M3	7.62
	N700E - 004LF N700E - 007LF N700E - 015LF	M3	7.62
	N700E - 015SF N700E - 022SF	M4	11
	N700E - 022LF N700E - 037LF N700E - 004HF N700E - 007HF N700E - 015HF N700E - 022HF N700E - 037HF	M4	11
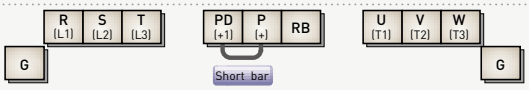	N700E - 055LF N700E - 075LF N700E - 055HF N700E - 075HF N700E - 110HF	M4	10.6
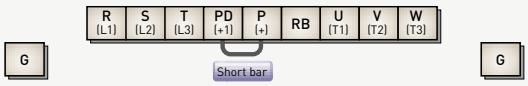	N700E - 110LF	M5	13
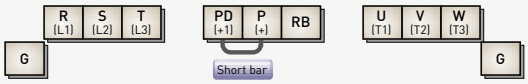	N700E - 150LF N700E - 150HF N700E - 185HF N700E - 220HF	M5	13
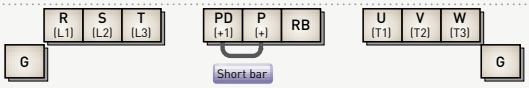	N700E - 185LF N700E - 220LF	M6	17
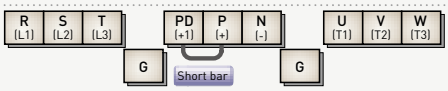	N700E - 300HF N700E - 370HF	M6	17
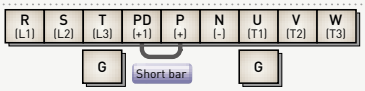	N700E - 450HF N700E - 550HF	M8	22
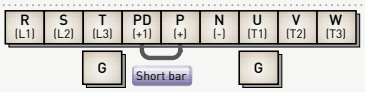	N700E - 750HF N700E - 900HF	M8	29
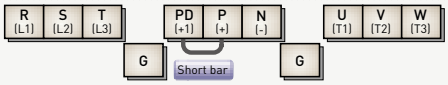	N700E - 1100HF N700E - 1320HF	M10	30
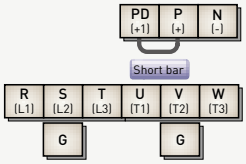	N700E-1600HF N700E-2800HF N700E-2200HF N700E-3500HF	M10 x 2	26

Explanation of Main Circuit Terminals

Symbol	Terminal Name	Explanation of Content
R, S, T (L1, L2, L3)	Main Power	Connect input power.
U, V, W (T1, T2, T3)	Inverter Output	Connect 3-phase motor.
PD, P (+1, +)	DC Reactor	After removing the short bar between PD and P, connect DC reactor for improvement of power factor.
P, RB (+, B+)	External Braking Resistor	Connect optional external braking resistor. (22kW ↓)
P, N (+, -)	External Braking Unit	Connect optional external braking unit. (30kW ↑)
G	Inverter Earth Terminals	Grounding terminal.

Control Terminal Arrangement

■ 004~022SF, 004~037LF/HF

CM1	5	4	3	2	1	P24	H	O/OI	L	FM	AL0	AL1	AL2

■ 055~220LF / 055~3500HF

RS 485	DOP	RXP	RXN	CM1	CM1	6	5	4	3	2	1	CM1	P24	H	O	OI	L	L	FM	CM1	RN0	RN1	AL0	AL1	AL2

Explanation of Control Circuit Terminals

Signal	Symbol	Terminal Name	Explanation of Content
Input Signal 1)	P24	Power Terminal for Input Signal	24VDC±10%, 35mA
	6 (RS) 5 (AT) 4 (CF2) 3 (CF1) 2 (RV) 1 (FW)	Intelligent Input Terminal : Forward Direction (FW), Reverse Direction (RV), Multi-speed 1-4 (CF1-4), 2-Level Accel/Decel Command (2CH), Reset (RS), Free-run Stop (FRS), External Trip (EXT), Soft Lock (SFT), Jogging Run (JG), Unattended Start Protection (USP) 2), Analog Input Voltage / Current Transferring (AT)	Contact input : Close : On (run) Open : Off (stop) Minimum on time: over 12ms
	CM1	Common Terminal for Input or Monitor Signal	
Monitor Signal	FM	Output Frequency Meter, Output Current Meter, Output Voltage Meter	Analog frequency meter
Frequency Setup Signal	H	Power Supply for Frequency Command	10VDC
	O	Voltage Frequency Command Terminal	0~10VDC, input impedance 10kΩ
	OI	Current Frequency Command Terminal	4~20mA, input impedance 200Ω
	L	Common Terminal for Frequency Command	
Output Signal 3)	RN0 RN1	Intelligent Output Terminal : Running Signal (RUN), Frequency Arrival Signal (at the set frequency) (FA1), Frequency Arrival Signal (at or above the set frequency) (FA2), Overload Advanced Notice Signal (OL), Output Deviation of PID Signal (OD), Alarm Signal (AL)	Rated value for contact : AC 250V 2.5A (resisitive load) 0.2A (Induced load) DC 30V 3.0A (resisitive load) 0.7A (induced load)
Trip Alarm Output Signal 4)	AL0 AL1 AL2	Alarm Output Signal : at Normal Operation, Power Off (Initial Condition) : AL0-AL2 Closed at Abnormal : AL0-AL1 Closed	Rated value for contact : AC 250V 2.5A (resisitive load) 0.2A (induced load) DC 30V 3.0A (resisitive load) 0.7A (induced load)

※ 1) Input signal terminals from 1 to 6 are contact "a"s.
When you want to change those terminals to contact "b"s, configuration should be set in C07~C12

2) USP: Protects inverter from restarting when power supply is on.

3) Intelligent relay output terminal RN is "a" contact. When you use RN as "b" contact, please set it to C14.

4) Operator can select 'pre-warning alarm for overload' and 'arrival to the predefined frequency' signals with the intelligent output terminal.

Terminal Connecting Diagram

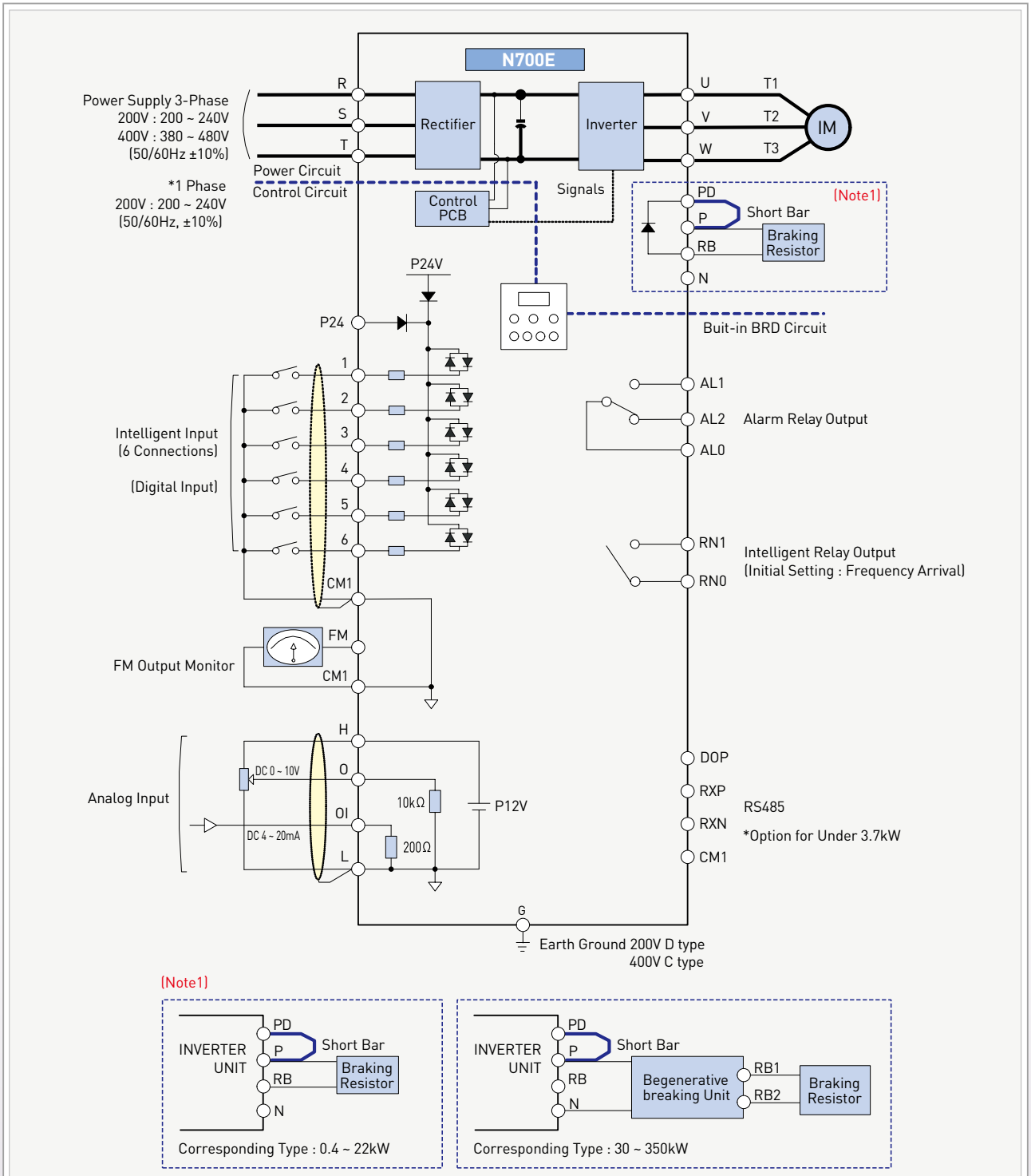

※ In case of under 3.7kW, refer user's manual for more details. (5 Intelligent input, Merged O/OI, No RN0/RN1)

Terminal Name	1, 2, 3, 4, 5, 6, P24, FM	H, O, OI
Common	CM1	L

※ Be careful as there are different kinds of common terminals.

Connection with Input Terminals [1)]

Using Interface Power Inside Inverter

■ Sink Type

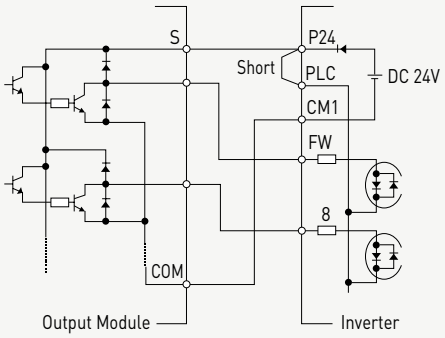

Using External Power

■ Sink Type

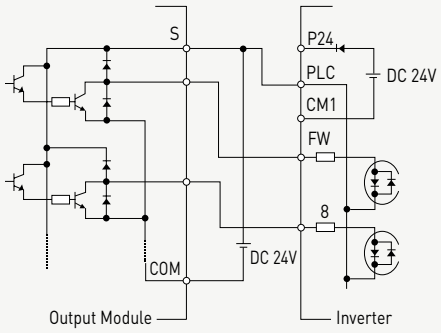

■ Source Type

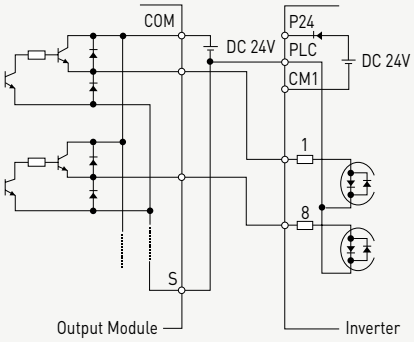

※ Be sure to turn on the inverters after turning on the PLC and its external power source to prevent the parameters in the inverter from being modified.

1) In case of over 5.5kW, refer user's manual.

Connection with Output Terminals

■ Sink Type

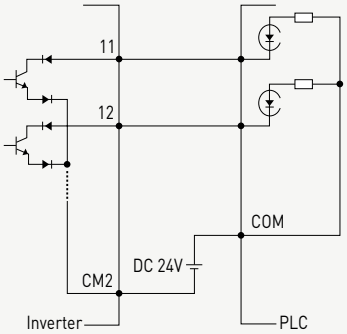

■ Source Type

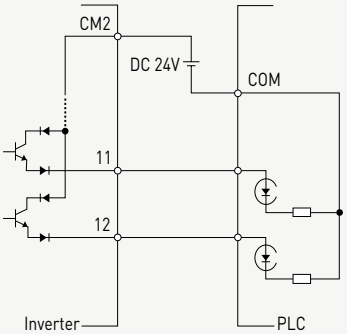

Error Codes

Name	Description	Display on Digital Operator
Over-current Protection	When the inverter output is short circuited or motor shaft is locked, excessive current for the inverter flows. To protect inverter from excessive current, inverter output is turned off by operating current protection circuit.	E04
Overload Protection	When an overload of motor is detected by the electronic thermal function, the inverter trips and turns off its output.	E05
Over-voltage Protection	When the DC bus voltage exceeds a threshold, due to regenerative energy from the motor, the inverter trips and turns off its output.	E07
Communication Error	An error between operator and inverter is detected.	E60
Under-voltage Protection	A decrease of internal DC bus voltage below a threshold results in a fault of controlling circuit. This condition can also generate excessive motor heat or cause low torque. The inverter trips and turns off its output when the voltage is below 150~160V (200V class) or below 300~320V (400V class) An instantaneous interruption may cause this error.	E09
Output Short-circuit	When outputs are short circuited, excessive current causes protection circuit to stop inverter output.	E04 or E34
USP Error	If power is on at the same time inverter is being operated in terminal mode, USP error will be seen (in case of USP function is enabled).	E13
EEPROM Error	When the external noise or temperature rise causes internal EEPROM error, an inverter output is turned off. Check the setting data because there is a case of alarm signal failure.	E08
External Trip	When the external equipment makes a failure, inverter receives this failure signal and turns off the output (Intelligent input terminal need to be set for this function).	E12
Temperature Trip	When the inverter internal temperature is higher than the specified value, the thermal sensor in the inverter module detects it and turns off the inverter output.	E21
Ground Fault Protection	The inverter is protected by the detection of ground faults between the inverter output and the motor.	E14
Inverter Overload Protection	The Inverter is protected by overheating. Protection will operate 150% current for 1minute(In case of base carrier frequency). Operation times are depend on inverter capacity.	E17
Input Phase Loss Protection	The inverter protected by (R,S,T) input phase loss(in case of 1-phase, R or S input phase).	E20

※ Protective functions protect inverter from over-current, over-voltage and under-voltage.
Once protective functions are operated, all outputs of inverter are disconnected and motor is stopped by free-run stop.
Inverter keeps this protective status until reset command is entered.

Common Applicable Tools

Class	Motor Output (kW)	Inverter Model	Power Cable (mm²) 1) R,S,T,U,V,W,PD,P	External Resistor between P and RB (mm²)	Screw Size of Terminal	Torque (N·m)	Applicable Tools		
							Circuit Breaker (MCCB)		Magnetic Contactor (MC)
200V Class	0.4	N700E-004SF	More than 1.25	-	M3	0.5	HBS-33	5A	HiMC10W
	0.4	N700E-004LF	More than 1.25	-	M3	0.5	HBS-33	5A	HiMC10W
	0.75	N700E-007SF	More than 1.25	-	M3	0.5	HBS-33	10A	HiMC10W
	0.75	N700E-007LF	More than 1.25	-	M3	0.5	HBS-33	10A	HiMC10W
	1.5	N700E-015SF	More than 2	-	M4	1.2	HBS-33	15A	HiMC10W
	1.5	N700E-015LF	More than 2	-	M3	0.5	HBS-33	15A	HiMC10W
	2.2	N700E-022SF	More than 2	-	M4	1.2	HBS-33	20A	HiMC20W
	2.2	N700E-022LF	More than 2	-	M4	1.2	HBS-33	20A	HiMC20W
	3.7	N700E-037LF	More than 3.5	-	M4	1.2	HBS-33	30A	HiMC20W
	5.5	N700E-055LF	More than 6	6	M4	1.2	HBS60N	50A	HiMC32
	7.5	N700E-075LF	More than 10	6	M4	1.2	HBS60N	50A	HiMC32
	11	N700E-110LF	More than 16	6	M5	3.0	HBS100N	75A	HiMC50
	15	N700E-150LF	More than 25	16	M5	3.0	HBS100N	100A	HiMC65
	18.5	N700E-185LF	More than 30	16	M6	4.5	HBS225N	150A	HiMC80
	22	N700E-220LF	More than 35	16	M6	4.5	HBS225N	150A	HiMC110
400V Class	0.4	N700E-004HF	More than 1.25	-	M4	1.2	HBS-33	5A	HiMC10W
	0.75	N700E-007HF	More than 1.25	-	M4	1.2	HBS-33	5A	HiMC10W
	1.5	N700E-015HF	More than 1.25	-	M4	1.2	HBS-33	10A	HiMC10W
	2.2	N700E-022HF	More than 1.25	-	M4	1.2	HBS-33	10A	HiMC10W
	3.7	N700E-037HF	More than 2	-	M4	1.2	HBS-33	15A	HiMC20W
	5.5	N700E-055HF	More than 4	4	M4	1.2	HBS30N	30A	HiMC18
	7.5	N700E-075HF	More than 4	4	M4	1.2	HBS30N	30A	HiMC18
	11	N700E-110HF	More than 6	6	M4	1.2	HBS60N	50A	HiMC32
	15	N700E-150HF	More than 10	10	M5	3.0	HBS100N	50A	HiMC40
	18.5	N700E-185HF	More than 16	10	M5	3.0	HBS100N	75A	HiMC40
	22	N700E-220HF	More than 25	10	M5	3.0	HBS100N	75A	HiMC50
	30	N700E-300HF	More than 25	-	M6	4.5	HBS100N	100A	HiMC65
	37	N700E-370HF	More than 35	-	M6	4.5	HBS225N	100A	HiMC80
	45	N700E-450HF	More than 35	-	M8	6.0	HBS225N	150A	HiMC110
	55	N700E-550HF	More than 70	-	M8	6.0	HBS225N	175A	HiMC130
	75	N700E-750HF	More than 35x2	-	M8	6.0	HBS400N	225A	HiMC180
	90	N700E-900HF	More than 35x2	-	M8	6.0	HBS400N	225A	HiMC220
	110	N700E-1100HF	More than 50x2	-	M10	10.0	HBS400N	350A	HiMC260
	132	N700E-1320HF	More than 80x2	-	M10	10.0	HBS400N	350A	HiMC300
	160	N700E-1600HF	More than 0x2	-	M13	12	HiBS800	700A	HiMC400
	220	N700E-2200HF	More than 100x2	-	M13	12	HiBS800	800A	HiMC500
	280	N700E-2800HF	More than 150x2	-	M13	12	HiBS1000	1000A	HiMC630
	350	N700E-3500HF	More than 200x2	-	M13	12	HiBS1200	1200A	HiMC800

※ 1) Use 600V, 75°C copper wire.

Digital Operator

- Digital Operater is economical operater that can control main setting and order from a distance using exclusive cable.
- Digital Operater have four LED display, can observe the status of inverter from a distance.

Layout and Specification

Index		Content
Model Name		DOP7
Lay-out		67.5 mm (H) X 64.9 mm (W) X 35.1 mm (D)
Display	7-segment LED	4-digit 7-segment LED
	DOT LED	7 (POWER / RUN / PRG / Hz / A / RUN key / Volume LED)
Key-pad		7 (RUN / STOP (RESET) / FUNC / UP / DOWN / STR / Volume)
Communication		RS485 (Modular Method)
Function		Observe inverter running state
Cable		1.5 m, 3 m

Digital Operator (DOP7)

Keys

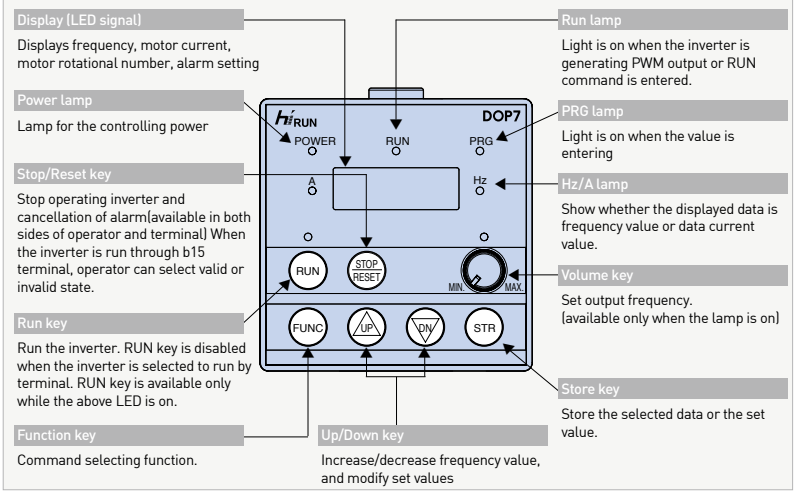

Example

Digital Operater (DOP7)

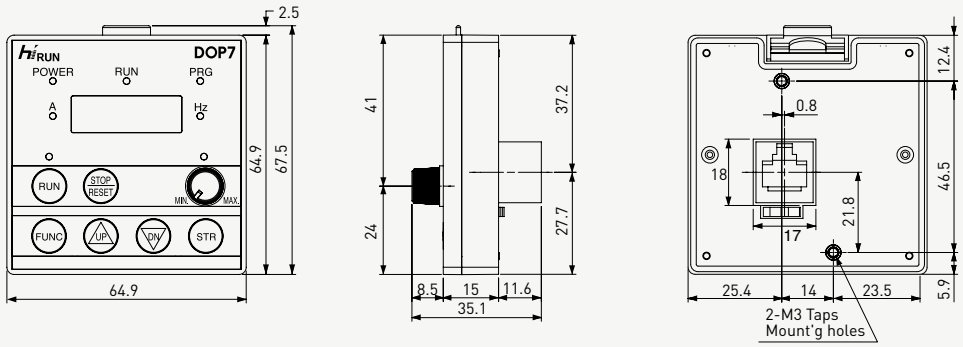

Wiring and Options

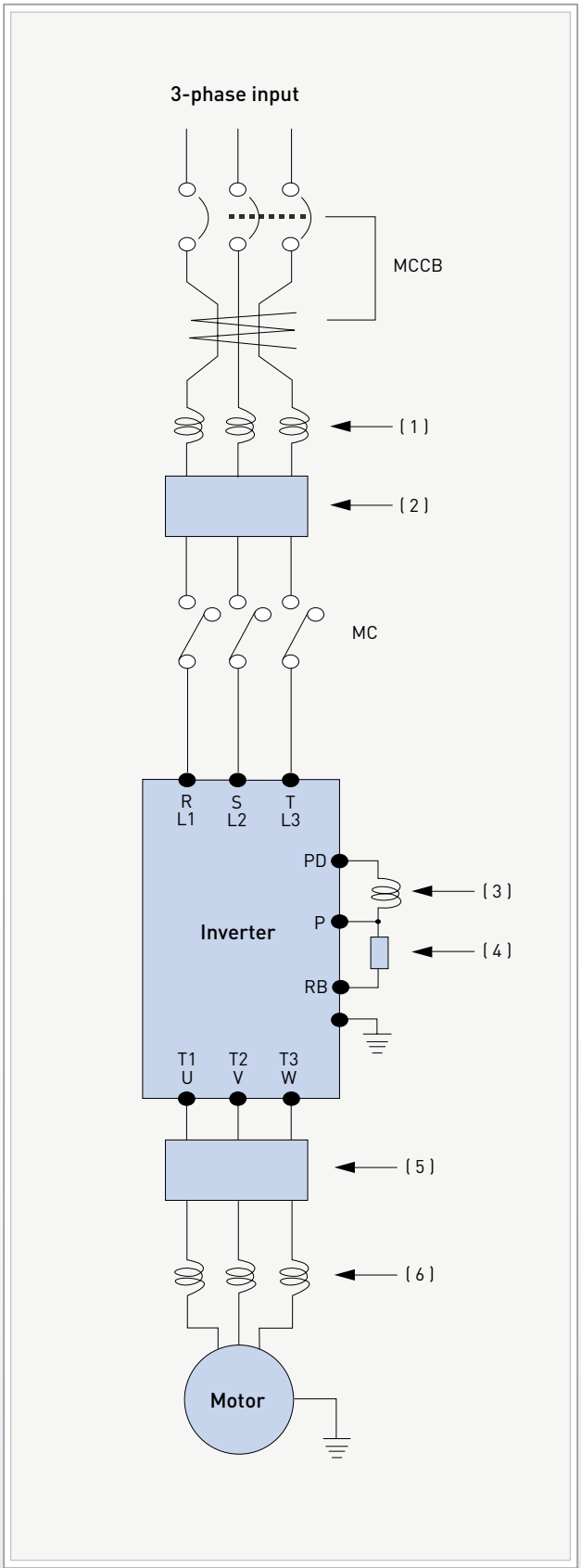

Correct selection of peripherals is required in order to normal operation of inverter

- In case of an invalid system configuration and connection, it affect an abnormal operation or reduction in product life. In the worst case, there is a risk of burn out the inverter.
- The sensitivity of circuit breaker (MCCB) should be differentiated by the sums of wiring distances (inverter-power supply and inverter-motor).

Wiring Distance	Sensitive Current(mA)
Under 100m	50
Under 300m	100
Under 600m	200

※ - IV line has high non-dielectric constant : current increases 8 times. When wiring distance is over 100m, use CV line.
- ON/OFF operation is prohibited at the output side by using electromagnetic contactor. When it is necessary to apply electromagnetic contactor at the output side by using bypass circuit, ON/OFF should be applied while inverter is in normal operation.

Order	Function Name	Description
(1)	Input-side AC Reactor	As a measure of suppressing harmonics induced on the power supply lines, it is applied when imbalance of the main power voltage exceeds 3% (and power source capacity is more than 500kVA), or when the power voltage is rapidly changed. It also improves the power factor.
(2)	Input-side Noise Filter	This reduces common noise that is generated between input power and ground. Connect this filter to 1st side (input side) of inverter.
(3)	DC Reactor	Suppresses harmonics generated by the inverter
(4)	Regenerative Braking Unit	This will increase braking performance when inverter have high brake torque (or load have big inertial or invertor operate frequently ON/OFF).
(5)	Output-side Noise Filter	This reduces radiated noise from wiring in the inverter output side. This also reduces wave fault to radio and TV, and it is used for preventing malfunction of sensor and measuring instruments.
(6)	Output-side AC Reactor	This reactor reduces the vibration in the motor caused by the inverter's switching waveforms, by smoothing the waveforms to approximate commercial power quality. When wiring from the inverter to the motor is more than 10m in length, inserting a reactor prevents thermal relay's malfunction by harmonic generated by inverter's high switching.

Input Reactor Specification

AC Reactor Model (High Harmonics)	Inverter	Current (A)	Inductance (mH)	Size(mm)								Weight (kg)	Drawing
				H	W	B	C	D	D1	G	ExF		
200V													
ACL-LI-1.5 (ACL-LI5-1.5)	004SF/LF	6	1.16 (2.91)	95 (130)	100 (155)	65 (125)	60 (72)	95 (110)	75 (92)	30 (33.5)	5Φ	1.5 (2.5)	A (A)
ACL-LI-2.5 (ACL-LI5-2.5)	007SF/LF	8.3	0.78 (1.95)	130 (130)	155 (155)	125 (125)	72 (72)	110 (110)	92 (92)	30 (33.5)	7x20	2.5 (3.5)	A (A)
ACL-LI-3.5 (ACL-LI5-3.5)	015~022SF/LF	18	0.56 (1.39)	130 (145)	155 (155)	125 (125)	72 (75)	110 (120)	92 (95)	30 (30)	7x20	2.5 (4.5)	A (A)
ACL-LI-5.5 (ACL-LI5-5.5)	037LF	24	0.36 (0.89)	130 (145)	155 (155)	125 (125)	72 (75)	110 (120)	92 (95)	30 (30)	7x20	3 (5.5)	A (A)
ACL-LI-7.5 (ACL-LI5-7.5)	055LF	26.5	0.24 (0.60)	130 (145)	155 (155)	65 (125)	82 (75)	120 (120)	102 (95)	30 (30)	7x20	4 (6)	A (A)
ACL-LI-11 (ACL-LI5-11)	075LF	35	0.18 (0.46)	145 (145)	155 (155)	125 (125)	75 (85)	120 (125)	95 (105)	30 (30)	7x20	6 (7.5)	A (A)
ACL-LI-15 (ACL-LI5-15)	110LF	50.5	0.13 (0.32)	145 (150)	155 (180)	125 (155)	75 (80)	120 (-)	95 (100)	30 (30)	7x20	6 (9)	A (B)
ACL-LI-22 (ACL-LI5-22)	150LF	70.5	0.09 (0.23)	190 (150)	240 (180)	125 (155)	93 (105)	145 (-)	113 (125)	30 (30)	9x20	15 (14)	C (B)
ACL-LI-33 (ACL-LI5-33)	185~220LF	105	0.06 (0.15)	220 (150)	240 (180)	125 (155)	93 (105)	145 (-)	113 (125)	30 (30)	9x20	16 (16)	C (B)
400V													
ACL-HI-1.5 (ACL-HI5-1.5)	004~007HF	4	3.2 (8)	125 (140)	150 (150)	120 (120)	70 (70)	105 (110)	90 (95)	33.5 (30)	7x20	1.5 (3.5)	A (A)
ACL-HI-2.5 (ACL-HI5-2.5)	015HF	5.2	2.5 (6.5)	125 (140)	150 (150)	120 (120)	70 (70)	105 (110)	90 (95)	33.5 (30)	7x20	2 (4)	A (A)
ACL-HI-3.5 (ACL-HI5-3.5)	022HF	8.5	1.6 (4)	125 (140)	150 (150)	120 (120)	70 (70)	105 (110)	90 (95)	33.5 (30)	7x20	2.5 (4.5)	A (A)
ACL-HI-5.5 (ACL-HI5-6.5)	037HF	12	1.42 (3.56)	130 (145)	155 (155)	125 (125)	72 (75)	110 (115)	92 (95)	33.5 (30)	7x20	3 (5)	A (A)
ACL-HI-7.5 (ACL-HI5-8)	055HF	14.5	0.88 (2.21)	130 (145)	155 (155)	125 (125)	72 (75)	110 (115)	92 (95)	33.5 (30)	7x20	3.5 (5.5)	A (A)
ACL-HI-11 (ACL-HI5-11)	075HF	17.5	0.73 (1.83)	145 (145)	155 (155)	125 (125)	75 (85)	120 (125)	95 (105)	30 (30)	7x20	4.5 (7)	A (A)
ACL-HI-15 (ACL-HI5-16)	110HF	25	0.51 (1.28)	145 (145)	155 (155)	125 (125)	75 (85)	120 (125)	95 (105)	30 (30)	7x20	5.5 (7.5)	A (A)
ACL-HI-22 (ACL-HI5-22)	150HF	35	0.37 (0.91)	145 (170)	155 (180)	125 (155)	85 (80)	130 (120)	105 (100)	30 (30)	7x20	6.5 (10)	A (A)
ACL-HI-33 (ACL-HI5-33)	185~220HF	52	0.25 (0.62)	150 (150)	180 (180)	155 (155)	80 (100)	- (-)	100 (120)	30 (30)	7x20	8.5 (14)	B (B)
ACL-HI-40 (ACL-HI5-40)	300HF	63	0.2 (0.51)	150 (180)	180 (240)	155 (100)	80 (103)	- (165)	100 (123)	30 (30)	7x20	9.5 (20)	B (C)
ACL-HI-50 (ACL-HI5-50)	370HF	80	0.16 (0.4)	200 (210)	240 (280)	100 (100)	98 (108)	150 (165)	118 (128)	30 (30)	9x20	17 (22)	C (C)
ACL-HI-60 (ACL-HI5-60)	450HF	99	0.13 (0.32)	210 (220)	240 (280)	100 (100)	98 (98)	150 (165)	118 (118)	30 (30)	9x20	18 (23)	C (C)
ACL-HI-70 (ACL-HI5-70)	550HF	120	0.11 (0.27)	230 (230)	240 (290)	125 (125)	113 (113)	160 (170)	133 (133)	35 (35)	9x20	22 (28)	C (C)
ACL-HI-100 (ACL-HI5-100)	750HF	165	0.08 (0.19)	230 (260)	240 (280)	125 (125)	113 (113)	160 (175)	133 (133)	35 (30)	9x20	24 (33)	C (C)
ACL-HI-120 (ACL-HI5-120)	900HF	193	0.07 (0.17)	230 (230)	240 (290)	125 (125)	123 (123)	170 (185)	143 (143)	40 (30)	9x20	25 (37)	C (C)
ACL-HI-150 (ACL-HI5-150)	1100HF	235	0.05 (0.14)	230 (250)	240 (320)	125 (125)	143 (143)	180 (195)	163 (163)	50 (40)	9x20	26 (45)	C (C)
ACL-HI-180 (ACL-HI5-180)	1320HF	285	0.04 (0.11)	270 (270)	290 (320)	125 (125)	143 (143)	190 (200)	163 (163)	50 (45)	9x20	33 (48)	C (C)
ACL-HI-220 (ACL-HI5-200)	1600HF	358	0.04 (0.09)	300 (320)	290 (350)	125 (125)	133 (133)	190 (200)	153 (153)	40 (40)	11 x 20	40 (60)	C (C)
ACL-HI-300 (ACL-HI5-300)	2200HF	494	0.03 (0.06)	300 (300)	300 (350)	125 (125)	138 (138)	200 (205)	158 (158)	40 (40)	11 x 20	50 (67)	C (C)
ACL-HI-400 (ACL-HI5-400)	2800HF	578	0.02 (0.06)	300 (310)	300 (360)	125 (125)	158 (166)	215 (250)	178 (186)	50 (35)	11 x 20	58 (90)	C (C)
ACL-HI-500 (ACL-HI5-500)	3500HF	720	0.018 (0.044)	300 (380)	300 (420)	125 (125)	158 (166)	215 (250)	178 (186)	50 (45)	11 x 20	75 (120)	C (C)

Input/Output AC Reactor

Drawing

A TYPE

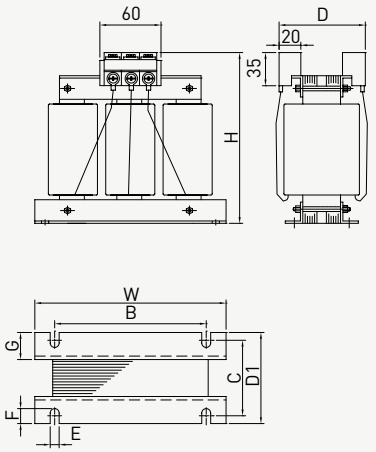

B TYPE

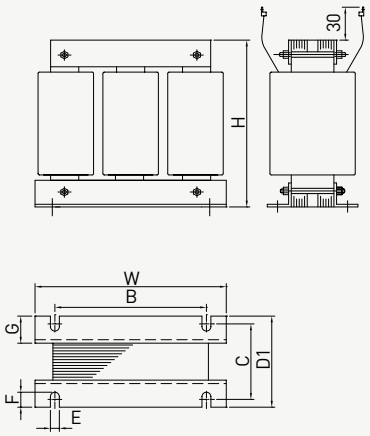

C TYPE

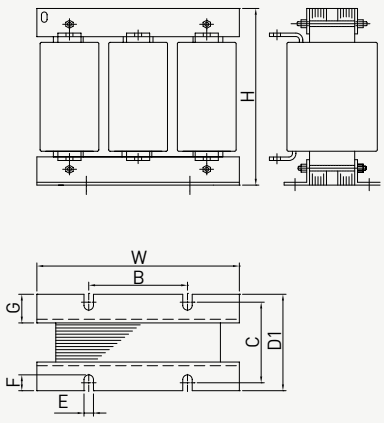

Output Reactor Specification [1)]

AC Reactor Model	Inverter	Current (A)	Inductance (mH)	Size(mm)								Weight (kg)	Drawing
				H	W	B	C	D	D1	G	ExF		
200V													
ACL-L-0.4	004SF/LF	3	1.5	130	155	125	72	105	92	33.5	7x20	2.5	A
ACL-L-0.75	007SF/LF	4.2	1.2	130	155	125	72	105	92	33.5	7x20	2.5	A
ACL-L-1.5	015SF/LF	7.5	0.67	130	155	125	72	105	92	33.5	7x20	3	A
ACL-L-2.2	022SF/LF	10.5	0.41	130	155	125	72	105	92	33.5	7x20	3	A
ACL-L-3.7	037LF	16	0.25	130	155	125	72	105	92	33.5	7x20	3.5	A
ACL-L-5.5	055LF	22	0.18	145	155	125	85	125	105	30	7x20	5	A
ACL-L-7.5	075LF	32	0.12	145	155	125	85	125	105	30	7x20	6	A
ACL-L-11	110LF	43	0.09	145	155	125	85	125	105	30	7x20	7	A
ACL-L-15	150LF	64	0.06	150	180	155	80	-	100	30	7x20	7.5	B
ACL-L-18.5	185LF	80	0.05	150	180	155	80	-	100	30	7x20	8	B
ACL-L-22	220LF	95	0.042	150	180	155	80	-	100	30	7x20	8	B
400V													
ACL-H-1.5	004~015HF	3.8	2.12	130	155	125	72	110	92	33.5	7x20	2.5	A
ACL-H-2.2	022HF	5.3	1.52	130	155	125	72	110	92	33.5	7x20	3	A
ACL-H-3.7	037HF	8	1.01	130	155	125	72	110	92	33.5	7x20	3.5	A
ACL-H-5.5	055HF	11	0.73	145	155	125	85	125	105	30	7x20	6	A
ACL-H-7.5	075HF	16	0.58	145	155	125	85	125	105	30	7x20	6.5	A
ACL-H-11	110HF	22	0.31	145	155	125	85	125	105	30	7x20	6.5	A
ACL-H-15	150HF	32	0.25	145	155	125	85	125	105	30	7x20	7	A
ACL-H-18.5	185HF	40	0.2	150	180	155	80	-	100	30	7x20	8.5	B
ACL-H-22	220HF	48	0.16	150	180	155	80	-	100	30	7x20	9	B
ACL-H-30	300HF	58	0.13	150	180	155	80	-	100	30	7x20	9.5	B
ACL-H-37	370HF	72	0.11	150	180	155	105	-	125	30	7x20	11	B
ACL-H-45	450HF	87	0.092	150	180	155	105	-	125	30	7x20	12	B
ACL-H-55	550HF	101	0.08	190	240	155	103	-	123	30	7x20	16	B
ACL-H-75	750HF	144	0.056	220	280	155	103	150	123	30	9x20	24	C
ACL-H-90	900HF	173	0.046	240	300	155	103	150	123	30	9x20	28	C
ACL-H-110	1100HF	217	0.037	260	310	155	123	170	143	40	11x20	32	C
ACL-H-132	1320HF	260	0.031	280	310	155	123	170	143	40	11x20	36	C
ACL-H-160	1600HF	300	0.024	260	320	290	123	185	143	40	11x20	38	C
ACL-H-220	2200HF	415	0.018	290	350	290	143	210	163	50	11x20	45	C
ACL-H-280	2800HF	525	0.015	310	350	290	153	220	173	50	11x20	57	C
ACL-H-375	3500HF	690	0.02										

※ 1) In case of P-Type, contact to HYUNDAI.

Input/Output AC Reactor

Wiring

Input Input AC Reactor

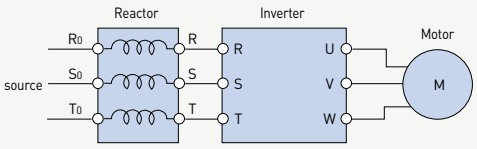

Output Output AC Reactor

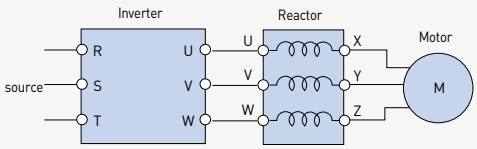

Inverter Noise Filter

Drawing

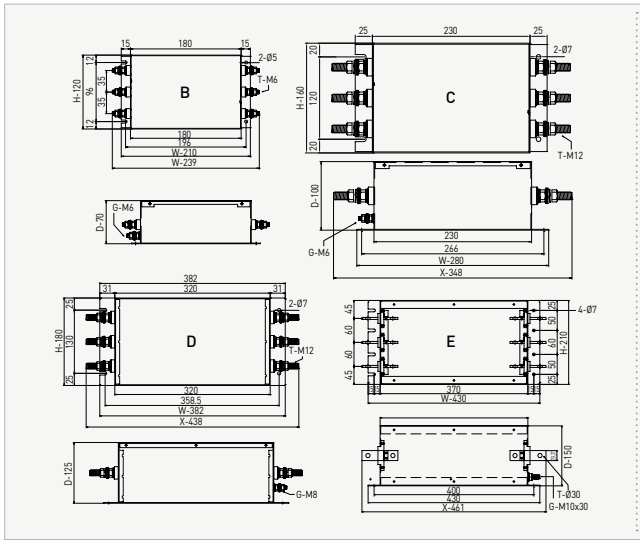

Wiring

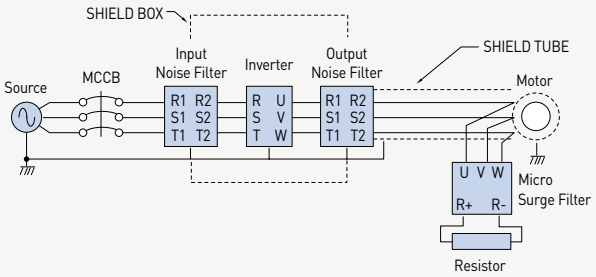

Input Noise Filter Specification

Model	Rated Current (A)	Model Name	Specification					Drawing
			Voltage (V)	Current (A)	Size [W x H x D.X(mm)]	G	T	
200V								
004~022SF 004~055LF	24	FT-20301S-A	250	30	210x120x70 · 239	M6	M6	B
075LF	32	FT-20401S-A	250	40	210x120x70 · 239	M6	M6	B
110LF	46	FT-20501S-A	250	50	210x120x70 · 239	M6	M6	B
150LF	64	FT-20701S-A	250	70	280x160x100 · 348	M6	M12	C
185LF	76	FT-20801S-A	250	80	280x160x100 · 348	M6	M12	C
220LF	95	FT-21001S-A	250	100	382x180x125 · 438	M8	M12	D
400V								
004~055HF	12	FT-40201S-A	450	20	210x120x70 · 239	M6	M6	B
075HF	16	FT-40201S-A	450	20	210x120x70 · 239	M6	M6	B
110HF	23	FT-40301S-A	450	30	210x120x70 · 239	M6	M6	B
150HF	32	FT-40401S-A	450	40	210x120x70 · 239	M6	M6	B
185HF	38	FT-40401S-A	450	40	210x120x70 · 239	M6	M6	B
220HF	48	FT-40501S-A	450	50	210x120x70 · 239	M6	M6	B
300HF	58	FT-40601S-A	450	60	210x120x70 · 239	M6	M6	B
370HF	75	FT-40801S-A	450	80	280x160x100 · 348	M6	M12	C
450HF	90	FT-41001S-A	450	100	382x180x125 · 438	M8	M12	D
550HF	110	FT-41201S-A	450	120	382x180x125 · 438	M8	M12	D
750HF	149	FT-41501S-A	450	150	430x210x150 · 461	M10	M10	E
900HF	176	FT-41801S-A	450	180	430x210x150 · 461	M10	M10	E
1100HF	217	FT-42201S-A	450	220	430x210x150 · 461	M10	M10	E
1320HF	260	FT-42601S-A	450	260	430x210x150 · 461	M10	M10	E
1600HF	300	KT-3AK-4400	450	400	475x200x220	M12	M12	
2200HF	415	KT-3AK-4500	450	500	510x200x220	M12	M12	
2800HF	525	A3R4700-KL	450	700	520x160x220	8x12	M8x30	
3500HF	656	A3R41K0-KL	450	1000	520x160x220	8x12	M8x30	

Output Noise Filter Specification

Model	Rated Current (A)	Model Name	Specification					Drawing
			Voltage (V)	Current (A)	Size [W x H x D.X(mm)]	G	T	
200V								
004~022SF 004~055LF	24	FT-20301SO-A	250	30	210x120x70 · 239	M6	M6	B
075LF	32	FT-20401SO-A	250	40	210x120x70 · 239	M6	M6	B
110LF	46	FT-20501SO-A	250	50	210x120x70 · 239	M6	M6	B
150LF	64	FT-20701SO-A	250	70	280x160x100 · 348	M6	M12	C
185LF	76	FT-20801SO-A	250	80	280x160x100 · 348	M6	M12	C
220LF	95	FT-21001SO-A	250	100	382x180x125 · 438	M8	M12	D
400V								
004~055HF	12	FT-40201SO-A	450	20	210x120x70 · 239	M6	M6	B
075HF	16	FT-40201SO-A	450	20	210x120x70 · 239	M6	M6	B
110HF	23	FT-40301SO-A	450	30	210x120x70 · 239	M6	M6	B
150HF	32	FT-40401SO-A	450	40	210x120x70 · 239	M6	M6	B
185HF	38	FT-40401SO-A	450	40	210x120x70 · 239	M6	M6	B
220HF	48	FT-40501SO-A	450	50	210x120x70 · 239	M6	M6	B
300HF	58	FT-40601SO-A	450	60	210x120x70 · 239	M6	M6	B
370HF	75	FT-40801SO-A	450	80	280x160x100 · 348	M6	M12	C
450HF	90	FT-41001SO-A	450	100	382x180x125 · 438	M8	M12	D
550HF	110	FT-41201SO-A	450	120	382x180x125 · 438	M8	M12	D
750HF	149	FT-41501SO-A	450	150	430x210x150 · 461	M10	M10	E
900HF	176	FT-41801SO-A	450	180	430x210x150 · 461	M10	M10	E
1100HF	217	FT-42201SO-A	450	220	430x210x150 · 461	M10	M10	E
1320HF	260	FT-42601SO-A	450	260	430x210x150 · 461	M10	M10	E
1600HF	300	KT-3AK-4400	450	400	475x200x220	M12	M12	
2200HF	415	KT-3AK-4500	450	500	510x200x220	M12	M12	
2800HF	525	A3R4700-KL	450	700	520x160x220	8x12	M8x30	
3500HF	656	A3R41K0-KL	450	1000	520x160x220	8x12	M8x30	

Brake Unit

Index	Voltage	400V											
	Model	BRD-VZ3								BU			
	Series	370H		550H		750H	750H (x2)			160-4S	220-4S	160-4S(x2)	220-4S(x2)
Inverter Capacity (kW) [1]		30	37	45	55	75	90	110	132	160	220	280	350
Input Max. DC Voltage (P-N)		DC 800V											
Operating Voltage (P-N)		725±5V											
Average Brake Torque		130%											
Available Brake Torque		20~30%											

※1) Under 22kW inverter contains brake unit.

Wiring

Case 1 : Use Brake Unit Only

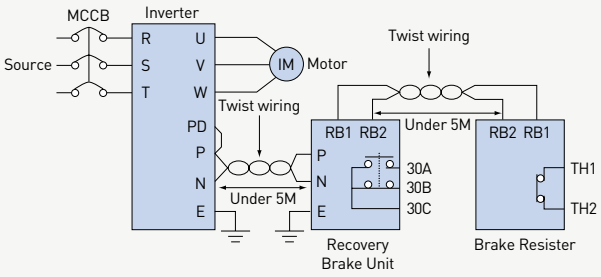

Case 2 : Link Brake Unit Together

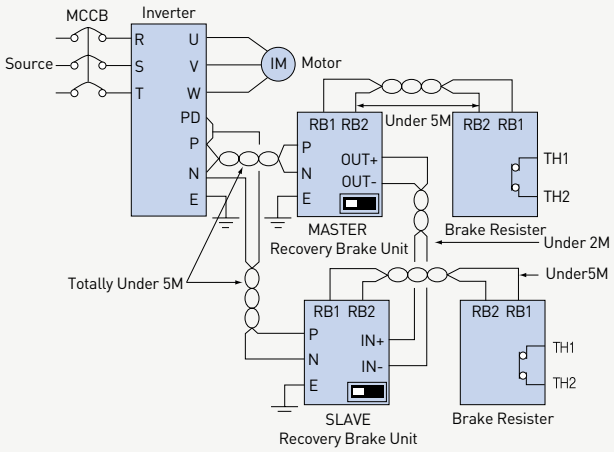

Combination with Inverter

Inverter Capacity : under 75(kW) (200V/400V)

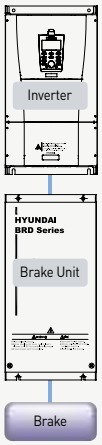

Inverter Capacity : 90~132(kW) (400V)

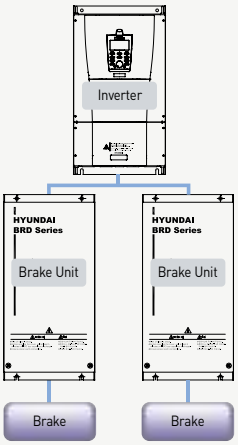

Drawing

■ BRD-VZ3

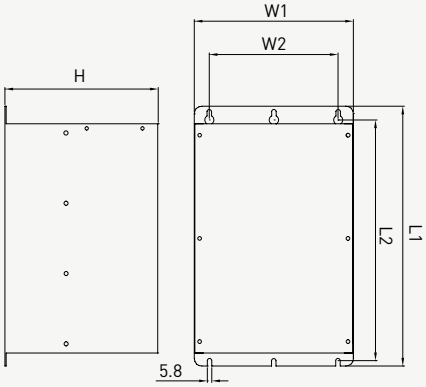

MODEL	L1±2	L2±2	W1±2	W2±2	H±2
BRD-VZ3	285	274	140	100	166
FBUH160-4S	340	325	295	254	202
FBUH220-4S	340	325	381	340	202

Brake Resister

Voltage	Inverter Model	Light Load			Heavy Load			Brake Unit
		Model Name	Resistor(Ω)	Capacity(kW)	Model Name	Resistor(Ω)	Capacity(kW)	
200V	N700E-004SF/LF	RB-00P3-50	50.0	0.3	RB-00P3-50	50.0	0.3	Default Inclusion
	N700E-007SF/LF							
	N700E-015SF/LF							
	N700E-022SF/LF	RB-00P3-50	50.0	0.3	RB-00P6-35	35.0	0.6	
	N700E-037LF	RB-00P6-35	35.0	0.6	RB-01P2-35	35.0	1.2	
	N700E-055LF	RB-01P0-17	17.0	1.0	RB-01P2-17	17.0	1.2	
	N700E-075LF							
	N700E-110LF							
	N700E-150LF	RB-02P5-8.7	8.7	2.5	RB-04P5-8.7	8.7	4.5	
	N700E-185LF	RB-03P0-6	6.0	3.0	RB-05P6-6	6.0	5.6	
	N700E-220LF	RB-04P0-6	6.0	4.0	RB-06P6-6	6.0	6.6	
400V	N700E-004HF	RB-00P3-180	180.0	0.3	RB-00P3-180	180.0	0.3	Default Inclusion
	N700E-007HF							
	N700E-015HF							
	N700E-022HF	RB-00P3-100	100.0	0.3	RB-00P6-100	100.0	0.6	
	N700E-037HF	RB-00P6-100	100.0	0.6	RB-00P6-100	100.0	0.6	
	N700E-055HF	RB-01P2-70	70.0	1.2	RB-01P8-70	70.0	1.8	
	N700E-075HF	RB-01P2-50	50.0	1.2	RB-02P4-50	50.0	2.4	
	N700E-110HF	RB-02P0-50	50.0	2.0	RB-03P3-50	50.0	3.3	
	N700E-150HF	RB-02P5-30	30.0	2.5	RB-04P5-30	30.0	4.5	
	N700E-185HF	RB-03P0-20	20.0	3.0	RB-05P6-20	20.0	5.6	
	N700E-220HF	RB-04P0-20	20.0	4.0	RB-06P6-20	20.0	6.6	
	N700E-300HF	RB-05P0-12	12.0	5.0	RB-09P0-12	12.0	9.0	Option
	N700E-370HF	RB-06P0-12	12.0	6.0	RB-11P2-12	12.0	11.2	
	N700E-450HF	RB-07P0-8	8.0	7.0	RB-13P5-8	8.0	13.5	
	N700E-550HF	RB-08P5-8	8.0	8.5	RB-16P5-8	8.0	16.5	
	N700E-750HF	RB-11P2-6	6.0	11.2	RB-22P5-6	6.0	22.5	
	N700E-900HF	RB-11P2-6 (x2)	6.0 (x2)	11.2	RB-22P5-6 (x2)	6.0 (x2)	22.5	
	N700E-1100HF							
	N700E-1320HF							
	N700E-1600HF	RB-22P5-3 (x2)	3.0 (x2)	22.5	RB-45P0-3 (x2)	3.0 (x2)	45.0	
	N700E-2200HF							
	N700E-2800HF							
	N700E-3500HF	RB-33P7-2 (x2)	2.0 (x2)	33.7	RB-67P5-3 (x2)	2.0 (x2)	67.5	

Brake Resistor Drwaing / Size

■ A TYPE : RB-01P0 ~ RB-02P0

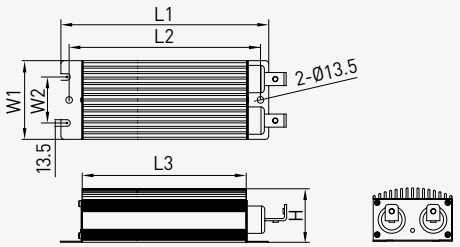

A TYPE	L1	L2	L3	W1	W2	H
RP-00P6	260	245	222	70	39	45
RP-00P3	190	172	152	70	39	45
RB-01P0	340	325	302	70	39	45
RB-01P2	400	385	362			
RB-01P8 ~ RB-02P0	510	495	472			

■ B TYPE : RB-02P4 ~ RB-22P5

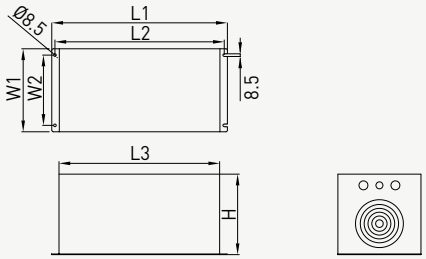

B TYPE	L1	L2	L3	W1	W2	H
RB-02P4 ~ RB-02P5	550	530	503	180	140	126
RB-03P0~RB-03P3				260	220	126
RB-04P0 ~ RB-05P6				180	140	182
RB-06P0~RB-07P0				260	220	182
RB-08P0 ~ RB-09P0				260	220	252
RB-11P2 ~ RB-13P5						322
RB-16P5						392
RB-22P5				340	300	392
RB-33P7	550	530	503	420	380	462
RB-45P0				500	460	462
RB-67P5				580	540	602

For Correct Operation

* Before use, be sure to read through the Instruction manual to insure proper use of the inverter.
* Note that the inverter requires electrical wiring; a trained specialist should carry out the wiring.
* The inverter in this catalogue is designed for general industrial applications. For special applications in fields such as aircraft, nuclear power, transport, vehicles, clinics, and underwater equipment, please consult us in advance.
* For application in a facility where human life is involved or serious losses may occur, make sure to provide safety devices to avoid a serious accident.
* The inverter is intended for use with a three-phase AC motor. For use with a load other than this, please consult with us.

Application to Motors | Application to General-purpose Motors

Operating Frequency	The overspeed endurance of a general-purpose motor is 120% of the rated speed for 2minutes (JIS C4004). For operation at higher than 60Hz, it is required to examine the allowable torque of the motor, useful life of bearings, noise, vibration, etc. In this case, be sure to consult the motor manufacturer as the maximum allowable rpm differs depending on the motor capacity, etc.
Torque Characteristics	The torque characteristics of driving a general-purpose motor with an inverter differ from those of driving it using commercial power (starting torque decreases in particular). Carefully check the load torque characteristic of a connected machine and the driving torque characteristic of the motor.
Motor Loss and Temperature Increase	An inverter-driven general-purpose motor heats up quickly at lower speeds. Consequently, the continuous torque level (output) will decrease at lower motor speeds. Carefully check the torque characteristics and speed range requirements.
Noise	When run by an inverter, a general-purpose motor generates noise slightly greater than by commercial power.
Vibration	When run by an inverter at variable speeds, the motor may generate vibrations, especially because of (a) unbalance of the rotor including a connected machine, or (b) resonance caused by the natural vibration frequency of a mechanical system. Particularly, be careful of (c) when a machine previously fitted with a constant speed is operated at variable speed. Vibration can be minimized by (1) avoiding resonance points by using the frequency jump function of the inverter, (2) using a tire-shaped coupling, or (3) placing a rubber shock absorber under the motor base.
Power Transmission Mechanism	Under continued, low-speed operation, oil lubrication can deteriorate in a power transmission mechanism with an oil type gear box (gear motor) or transmission. Check with the motor manufacturer for the permissible range of continuous speed. To operate at more than 60Hz, confirm the machine's ability to withstand the centrifugal force generated.

Application to Motors | Application to Special Motors

Gear Motor	The allowable rotation range of continuous drive varies depending on the lubrication method or motor manufacturer (Particularly in case of oil lubrication, pay attention to the low frequency range). Grease lubrication has no degradation of lubrication ability even when the number of rotation decreases (Allowable frequency range: 6~120Hz).
Brake-equipped Motor	For use of a brake-equipped motor, power supply for braking operation should be separately prepared. Connect the braking power supply to the primary side power of the inverter. Use brake operation (inverter stop) and free run stop (FRS) terminal to turn off inverter power.
Pole-change Motor	There are different kinds of pole-change motors (constant output characteristic type, constant torque characteristic type, etc.), with different rated current values. In motor selection, check the maximum allowable current for each motor of a different pole count. At the time of pole change, be sure to stop the motor.
Submersible Motor	The rated current of a submersible motor is significantly larger than that of the general-purpose motor. In inverter selection, be sure to check the rated current of the motor.
Explosion-proof Motor	Inverter drive is not suitable for a safety-enhanced explosion-proof type motor. The inverter should be used in combination with a pressure-proof and explosion-proof type of motor. ※ Explosion-proof verification is not available for N700E series.
Synchronous (MS) Motor / High-speed (HFM) Motor	In most cases, the synchronous (MS) motor and the high-speed (HFM) motor are designed and manufactured to meet the specifications suitable for a connected machine. As to proper inverter selection, consult the manufacturer.
Single-phase Motor	A single-phase motor is not suitable for variable-speed operation by an inverter drive. Therefore, use a three-phase motor.

Application to Motors | Application to the 400V-class Motor

A system applying a voltage-type PWM inverter with IGBT may have surge voltage at the motor terminals resulting from the cable constants including the cable length and the cable laying method. Depending on the surge current magnification, the motor coil insulation may be degraded. In particular, when a 400V class motor is used, a longer cable is used, and critical loss can occur. Take the following countermeasures : (1) install the LCR filter between the inverter and the motor, (2) install the AC reactor between the inverter and the motor, or (3) enhance the insulation of the motor coil.

Notes on Use | Drive

Run/Stop	Run or stop of the inverter must be done with the keys on the operator panel or through the control circuit terminal. Installing an electromagnetic contactor (Mg) should not be used as a switch of run/stop.
Emergency Motor Stop	When the protective function is operating or the power supply stops, the motor enters the free run stop state. When emergency stop or protection of motor is required, use of a mechanical brake should be considered.
High-frequency Run	N700E series can be set up to 400Hz. However it is extremely dangerous for rotational speed of two-pole motor to reach up to approx 24,000rpm. Therefore, carefully make selection and settings after checking the mechanical strength of the motor and connected machines. Consult the motor manufacturer when it is necessary to drive a standard (general-purpose) motor above 60Hz.

Notes on Use | Installation Location and Operating Environment

Avoid installation in areas of high temperature, excessive humidity, or easy condensation of dew, as well as areas that are dusty, subject to corrosive gases, residue of grinding solution, or salt. Install the inverter away from direct sunlight in a well-ventilated room that is free of vibration.
The inverter can be operated in the ambient temperature range from -10°C to 50°C

Notes on Use | Main Power Supply

Installation of an AC reactor on the Input Side	In the following examples involving a general-purpose inverter, a large peak current flows on the main power supply side, and could destroy the converter module. When such situations are predictable or connected crucial device is required to meet high reliability, install an AC reactor between the power supply and the inverter. Also, when influence of indirect lightning strike is possible, install a lightning arrester. A) The unbalance factor of the power supply is 3% or higher1.[1)] B) The power supply capacity is at least 10 times greater than the inverter capacity (the power supply capacity is 500kVA or more). C) Abrupt power supply changes are expected. Examples) ① Several inverters are interconnected with a short bus. ② A thyristor converter and an inverter are interconnected with a short bus. ③ Junction and disjunction of installed phase advance capacitor. In cases (A), (B) and (C), it is recommended to install an AC reactor on the main power supply side. 1) Example of how to calculate voltage unbalanced ratio. (voltage between lines on RS: VRS=205V, voltage between lines on ST : VST=201V, voltage between lines on TR: VTR=200V), max voltage between lines-average between lines= VRS-(VRS+VST+VTR)/3=205-202 · Voltage unbalanced ratio = $\frac{\text{Max. voltage between lines - Average voltage between lines}}{\text{Average voltage between lines}} \times 100 = \frac{\text{VRS-(VRS+VST+VTR)/3}}{\text{(VRS+VST+VTR)/3}} \times 100 = \frac{205-202}{202} \times 100 = 1.5(\%)$
Using an Independent Electric Power Plant	If an inverter is run by an independent electric power plant, harmonic current can cause to overheat the generator or distort output voltage waves of the generator. Generally, the generator capacity should be five times that of the inverter (kVA) in a PWM control system, or six times greater in a PAM control system.

Notes on Peripheral Equipment Selection

Wiring Connections		(1) Be sure to connect main power wires with R (L1), S (L2), and T (L3) (input) terminals and motor wires to U (T1), V (T2), and W (T3) terminals (output). (Incorrect connection will cause an immediate failure.) (2) Be sure to provide a grounding connection with the ground terminal(⏚)
Wiring between Inverter and Motor	Electromagnetic Contactor	When an electromagnetic contactor is installed between the inverter and the motor, do not perform on-off switching during running.
	Thermal Relay	When used with standard output motors (standard three-phase squirrel cage four pole motors), the N700E series does not need a thermal relay for motor protection due to the internal electronic protective circuit. A thermal relay, however, should be used: during continuous running out of a range of 30Hz to 60Hz for motors exceeding the range of electronic thermal adjustment (rated current). When several motors are driven by the same inverter, install a thermal relay for each motor. The RC value of the thermal relay should be more than 1.1times the rated current of the motor. Where the wiring length is 10m or more, the thermal relay tends to turn off readily. In this case, provide an AC reactor on the output side or use a current sensor.
Installing a Circuit Breaker		Install a circuit breaker on the main power input side to protect inverter wiring and ensure personal safety. Choose a circuit breaker compatible with inverter.
Wiring Distance		The wiring distance between the inverter and the remote operator panel should be 20meters or less. When this distance is exceeded, use CVD-E (current-voltage converter) or RCD-E (remote control device). Shielded cable should be used on the wiring. Beware of voltage drops on main circuit wires (A large voltage drop reduces torque).
Earth Leakage Relay		If the earth leakage relay (or earth leakage breaker) is used, it should have a sensitivity level of 15mA or more (per inverter). Leakage current is depending on the length of the cable.
Phase Advance Capacitor		Do not use a capacitor for improvement of power factor between the inverter and the motor because the high-frequency components of the inverter output may overheat or damage the capacitor

High-frequency Noise and Leakage Current

(1) High-frequency components are included in the input/output of the inverter main circuit, and they may cause interference in a transmitter, radio, or sensor if used near the inverter. The interference can be minimized by attaching noise filters (option) in the inverter.
(2) The switching of an inverter causes an increase of leakage current. Be sure to ground the inverter and the motor.

Lifetime of Primary Parts

Because a DC bus capacitor deteriorates as it undergoes internal chemical reaction, it should normally be replaced every five years. Be aware, however, that its life expectancy is considerably shorter when the inverter is subject to such adverse factors as high temperatures or heavy loads exceeding the rated current of the inverter. The figure at the right shows the approximate lifetime of the capacitor when it is used 24hours. Also, such moving parts as a cooling fan should be replaced. Maintenance, inspection and replacing parts must be performed by only specified professional engineers.

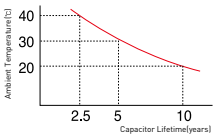

HHIS-WC-CE-B27-04, 2012.4 Designed by MERMONT

www.hyundai-elec.com

We build a better future
HYUNDAI HEAVY INDUSTRIES CO.,LTD. | **ELECTRO ELECTRIC SYSTEMS**

Head Office	1000, Bangeojinsunhwan-doro, Dong-gu, Ulsan, Korea Tel: 82-52-202-8101~8	Fax: 82-52-202-8100
Seoul (Sales & Marketing)	75, Yulgok-ro, Jongno-gu, Seoul, Korea Tel: 82-2-746-7596, 7452	Fax: 82-2-746-7647
Atlanta	6100 Atlantic Blvd. Suite 201, Norcross, GA30097, U.S.A. Tel: 1-678-823-7839	Fax: 1-678-823-7553
New Jersey	300 Sylvan Avenue, Englewood Cliffs, NJ, 07632, U.S.A. Tel: 1-201-816-0286, 8028	Fax: 1-201-816-4083
London	2nd Floor, The Triangle, 5-17 Hammersmith Grove, London, W6 0LG, UK Tel: 44-20-8741-0501	Fax: 44-20-8741-5620
Tokyo	8th Fl., Yurakucho Denki Bldg.1-7-1, Yuraku-Cho, Chiyoda-Ku, Tokyo, 100-0006, Japan Tel: 81-3-3212-2076, 3215-7159	Fax: 81-3-3211-2093
Osaka	I-Room 5th Fl. Nagahori-Plaza Bldg. 2-4-8, Minami Senba, Chuo-Ku, Osaka, 542-0081, Japan Tel: 81-6-6261-5766, 5767	Fax: 81-6-6261-5818
Mumbai	5th Floor, East Quadrant, The IL & FS Financial Centre, Plot No.C-22, G-Block, Bandra-Kurla Complex, Bandra(E), Mumbai 400 051, India Tel: 91-22-2653-3424	Fax: 91-22-2653-3429
Riyadh	2nd Floor, The Plaza, P.O Box 21840, Riyadh 11485, Saudi Arabia Tel: 966-1-462-2331	Fax: 966-1-464-4696
Dubai	205, Building 4, Emaar Square, Sheikh Zayed Road, Pobox 252458, Dubai, UAE Tel: 971-4-425-7995	Fax: 971-4-425-7996
Kuwait	15th Floor, Al Sour Tower, Al Sour Street, Al-Qiblah, Kuwait Tel: 965-2291-5354	Fax: 965-2291-5355
Moscow	World Trade Center, Ent. 3, #1902, Krasnopresnenskaya Nab. 12, Moscow, 123610, Russia Tel: 7-495-258-1381	Fax: 7-495-258-1382
Madrid	Paseo De La Castellana 216, Planta 0, 28046 Madrid, Spain Tel: 34-91-732-0454, 733-6069	Fax: 34-91-733-2389
Sofia	1271, Sofia 41, Rojen Blvd., Bulgaria Tel: 359-2-803-3200, 3220	Fax: 359-2-803-3203
Montgomery	201 Folmar Parkway, Montgomery, AL 36105, U.S.A. Tel: 1-334-481-2000	Fax: 1-334-240-6869
Yangzhong	No.9 Xiandai Road, Xinba Scientific and Technologic Zone, Yangzhong, Jiangsu, P.R.C. Zip: 212212, China Tel: 86-511-8842-0666, 0212	Fax: 86-511-8842-0668, 0231